A. Introduction

1. **Title:** **Relay Performance During Stable Power Swings**
2. **Number:** **PRC-026-2**
3. **Purpose:** To ensure that load-responsive protective relays are expected to not trip in response to stable power swings during non-Fault conditions.
4. **Applicability:**

   4.1. Functional Entities:

   4.1.1 Generator Owner that applies load-responsive protective relays as described in PRC-026-2 – Attachment A at the terminals of the Elements listed in Section 4.2, Facilities.

   4.1.2 Planning Coordinator.

   4.1.3 Transmission Owner that applies load-responsive protective relays as described in PRC-026-2 – Attachment A at the terminals of the Elements listed in Section 4.2, Facilities.

   4.2. Facilities: The following Elements that are part of the Bulk Electric System (BES):

   4.2.1 Generators.

   4.2.2 Transformers.

   4.2.3 Transmission lines.

5. **Background:**

This is the third phase of a three-phased standard development project that focused on developing this new Reliability Standard to address protective relay operations due to stable power swings. The March 18, 2010, Federal Energy Regulatory Commission (FERC) Order No. 733 approved Reliability Standard PRC-023-1 – Transmission Relay Loadability. In that Order, FERC directed NERC to address three areas of relay loadability that include modifications to the approved PRC-023-1, development of a new Reliability Standard to address generator protective relay loadability, and a new Reliability Standard to address the operation of protective relays due to stable power swings. This project's SAR addresses these directives with a three-phased approach to standard development.

Phase 1 focused on making the specific modifications from FERC Order No. 733 to PRC-023-1. Reliability Standard PRC-023-2, which incorporated these modifications, became mandatory on July 1, 2012.

Phase 2 focused on developing a new Reliability Standard, PRC-025-1 – Generator Relay Loadability, to address generator protective relay loadability. PRC-025-1 became mandatory on October 1, 2014, along with PRC-023-3, which was modified to harmonize PRC-023-2 with PRC-025-1.

Phase 3 focuses on preventing protective relays from tripping unnecessarily due to stable power swings by requiring identification of Elements on which a stable or unstable power swing may affect Protection System operation, assessment of the security of load-

*** Mandatory BC Effective Date: R1: January 1, 2029 R2, R3, R4: January 1, 2031**

responsive protective relays to tripping in response to only a stable power swing, and implementation of Corrective Action Plans (CAP), where necessary. Phase 3 improves security of load-responsive protective relays for stable power swings so they are expected to not trip in response to stable power swings during non-Fault conditions while maintaining dependable fault detection and dependable out-of-step tripping.

6. Effective Date*:

B. Requirements and Measures

R1. Each Planning Coordinator shall, at least once each calendar year, provide notification of each generator, transformer, and transmission line BES Element in its area that meets one or more of the following criteria, if any, to the respective Generator Owner and Transmission Owner: *[Violation Risk Factor: Medium] [Time Horizon: Long-term Planning]*

Criteria:

1. Generator(s) where an angular stability constraint, identified in Planning Assessments of the Near-Term Transmission Planning Horizon for a planning event, that is addressed by limiting the output of a generator or a Remedial Action Scheme (RAS), and those Elements terminating at the Transmission station associated with the generator(s).
2. Elements associated with angular instability identified in Planning Assessments of the Near-Term Transmission Planning Horizon for a planning event..
3. An Element that forms the boundary of an island in the most recent underfrequency load shedding (UFLS) design assessment based on application of the Planning Coordinator's criteria for identifying islands, only if the island is formed by tripping the Element due to angular instability.
4. An Element identified in the most recent annual Planning Assessment of the Near-Term Transmission Planning Horizon where relay tripping occurs due to a stable or unstable[1] power swing during a simulated disturbance for a planning event.

M1. Each Planning Coordinator shall have dated evidence that demonstrates notification of the generator, transformer, and transmission line BES Element(s) that meet one or more of the criteria in Requirement R1, if any, to the respective Generator Owner and Transmission Owner. Evidence may include, but is not limited to, the following documentation: emails, facsimiles, records, reports, transmittals, lists, or spreadsheets.

[1] An example of an unstable power swing is provided in the Guidelines and Technical Basis section, "Justification for Including Unstable Power Swings in the Requirements section of the Guidelines and Technical Basis."

R2. Each Generator Owner and Transmission Owner shall: [Violation Risk Factor: High] [Time Horizon: Operations Planning]

2.1 Within 12 full calendar months of notification of a BES Element pursuant to Requirement R1, determine whether its load-responsive protective relay(s) applied to that BES Element meets the criteria in PRC-026-2 – Attachment B where an evaluation of that Element's load-responsive protective relay(s) based on PRC-026-2 – Attachment B criteria has not been performed in the last five calendar years.

2.2 Within 12 full calendar months of becoming aware[2] of a generator, transformer, or transmission line BES Element that tripped in response to a stable or unstable[3] power swing due to the operation of its protective relay(s), determine whether its load-responsive protective relay(s) applied to that BES Element meets the criteria in PRC-026-2 – Attachment B.

M2. Each Generator Owner and Transmission Owner shall have dated evidence that demonstrates the evaluation was performed according to Requirement R2. Evidence may include, but is not limited to, the following documentation: apparent impedance characteristic plots, email, design drawings, facsimiles, R-X plots, software output, records, reports, transmittals, lists, settings sheets, or spreadsheets.

R3. Each Generator Owner and Transmission Owner shall, within six full calendar months of determining a load-responsive protective relay does not meet the PRC-026-2 – Attachment B criteria pursuant to Requirement R2, develop a Corrective Action Plan (CAP) to meet one of the following: *[Violation Risk Factor: Medium] [Time Horizon: Operations Planning]*

- The Protection System meets the PRC-026-2 – Attachment B criteria, while maintaining dependable fault detection and dependable out-of-step tripping (if out-of-step tripping is applied at the terminal of the BES Element); or
- The Protection System is excluded under the PRC-026-2 – Attachment A criteria (e.g., modifying the Protection System so that relay functions are supervised by power swing blocking or using relay systems that are immune to power swings), while maintaining dependable fault detection and dependable out-of-step tripping (if out-of-step tripping is applied at the terminal of the BES Element).

M3. The Generator Owner and Transmission Owner shall have dated evidence that demonstrates the development of a CAP in accordance with Requirement R3. Evidence may include, but is not limited to, the following documentation: corrective action plans, maintenance records, settings sheets, project or work management program records, or work orders.

R4. Each Generator Owner and Transmission Owner shall implement each CAP developed pursuant to Requirement R3 and update each CAP if actions or timetables change until all actions are complete. *[Violation Risk Factor: Medium][Time Horizon: Long-Term Planning]*

M4. The Generator Owner and Transmission Owner shall have dated evidence that demonstrates implementation of each CAP according to Requirement R4, including updates to the CAP when actions or timetables change. Evidence may include, but is not limited to, the following documentation: corrective action plans, maintenance records, settings sheets, project or work management program records, or work orders.

C. Compliance

1. Compliance Monitoring Process

1.1. Compliance Enforcement Authority

The British Columbia Utilities Commission.

1.2. Evidence Retention

The following evidence retention periods identify the period of time an entity is required to retain specific evidence to demonstrate compliance. For instances where the evidence retention period specified below is shorter than the time since the last audit, the CEA may ask an entity to provide other evidence to show that it was compliant for the full time period since the last audit.

The Generator Owner, Planning Coordinator, and Transmission Owner shall keep data or evidence to show compliance as identified below unless directed by its CEA to retain specific evidence for a longer period of time as part of an investigation.

- The Planning Coordinator shall retain evidence of Requirement R1 for a minimum of one calendar year following the completion of the Requirement.
- The Generator Owner and Transmission Owner shall retain evidence of Requirement R2 evaluation for a minimum of 12 calendar months following completion of each evaluation where a CAP is not developed.
- The Generator Owner and Transmission Owner shall retain evidence of Requirements R2, R3, and R4 for a minimum of 12 calendar months following completion of each CAP.

If a Generator Owner, Planning Coordinator, or Transmission Owner is found non-compliant, it shall keep information related to the non-compliance until mitigation is complete and approved, or for the time specified above, whichever is longer.

The CEA shall keep the last audit records and all requested and submitted subsequent audit records.

[2] Some examples of the ways an entity may become aware of a power swing are provided in the Guidelines and Technical Basis section, "Becoming Aware of an Element That Tripped in Response to a Power Swing."

[3] An example of an unstable power swing is provided in the Guidelines and Technical Basis section, "Justification for Including Unstable Power Swings in the Requirements section of the Guidelines and Technical Basis."

This page is intentionally left blank

Table of Compliance Elements

R#	Time Horizon	VRF	Violation Severity Levels			
			Lower VSL	Moderate VSL	High VSL	Severe VSL
R1	Long-term Planning	Medium	The Planning Coordinator provided notification of the BES Element(s) in accordance with Requirement R1, but was less than or equal to 30 calendar days late.	The Planning Coordinator provided notification of the BES Element(s) in accordance with Requirement R1, but was more than 30 calendar days and less than or equal to 60 calendar days late.	The Planning Coordinator provided notification of the BES Element(s) in accordance with Requirement R1, but was more than 60 calendar days and less than or equal to 90 calendar days late.	The Planning Coordinator provided notification of the BES Element(s) in accordance with Requirement R1, but was more than 90 calendar days late. OR The Planning Coordinator failed to provide notification of the BES Element(s) in accordance with Requirement R1.

R#	Time Horizon	VRF	Violation Severity Levels			
			Lower VSL	Moderate VSL	High VSL	Severe VSL
R2	Operations Planning	High	The Generator Owner or Transmission Owner evaluated its load-responsive protective relay(s) in accordance with Requirement R2, but was less than or equal to 30 calendar days late.	The Generator Owner or Transmission Owner evaluated its load-responsive protective relay(s) in accordance with Requirement R2, but was more than 30 calendar days and less than or equal to 60 calendar days late.	The Generator Owner or Transmission Owner evaluated its load-responsive protective relay(s) in accordance with Requirement R2, but was more than 60 calendar days and less than or equal to 90 calendar days late.	The Generator Owner or Transmission Owner evaluated its load-responsive protective relay(s) in accordance with Requirement R2, but was more than 90 calendar days late. OR The Generator Owner or Transmission Owner failed to evaluate its load-responsive protective relay(s) in accordance with Requirement R2.

R#	Time Horizon	VRF	Violation Severity Levels			
			Lower VSL	Moderate VSL	High VSL	Severe VSL
R3	Long-term Planning	Medium	The Generator Owner or Transmission Owner developed a Corrective Action Plan (CAP) in accordance with Requirement R3, but in more than six calendar months and less than or equal to seven calendar months.	The Generator Owner or Transmission Owner developed a Corrective Action Plan (CAP) in accordance with Requirement R3, but in more than seven calendar months and less than or equal to eight calendar months.	The Generator Owner or Transmission Owner developed a Corrective Action Plan (CAP) in accordance with Requirement R3, but in more than eight calendar months and less than or equal to nine calendar months.	The Generator Owner or Transmission Owner developed a Corrective Action Plan (CAP) in accordance with Requirement R3, but in more than nine calendar months. OR The Generator Owner or Transmission Owner failed to develop a CAP in accordance with Requirement R3.
R4	Long-term Planning	Medium	The Generator Owner or Transmission Owner implemented a Corrective Action Plan (CAP), but failed to update a CAP when actions or timetables changed, in accordance with Requirement R4.	N/A	N/A	The Generator Owner or Transmission Owner failed to implement a Corrective Action Plan (CAP) in accordance with Requirement R4.

D. Regional Variances

None.

E. Interpretations

None.

F. Associated Documents

Applied Protective Relaying, Westinghouse Electric Corporation, 1979.

Burdy, John, *Loss-of-excitation Protection for Synchronous Generators GER-3183*, General Electric Company.

IEEE Power System Relaying Committee WG D6, *Power Swing and Out-of-Step Considerations on Transmission Lines*, July 2005: http://www.pes-psrc.org/Reports/Power%20Swing%20and%20OOS%20Considerations%20on%20Transmission%20Lines%20F..pdf.

Kimbark Edward Wilson, *Power System Stability, Volume II: Power Circuit Breakers and Protective Relays*, Published by John Wiley and Sons, 1950.

Kundur, Prabha, *Power System Stability and Control*, 1994, Palo Alto: EPRI, McGraw Hill, Inc.

NERC System Protection and Control Subcommittee, *Protection System Response to Power Swings*, August 2013: http://www.nerc.com/comm/PC/System%20Protection%20and%20Control%20Subcommittee%20SPCS%2020/SPCS%20Power%20Swing%20Report_Final_20131015.pdf.

Reimert, Donald, *Protective Relaying for Power Generation Systems*, 2006, Boca Raton: CRC Press.

Version History

Version	Date	Action	Change Tracking
1	November 13, 2014	Adopted by NERC Board of Trustees	New
1	March 17, 2016	FERC Order issued approving PRC-026-1. Docket No. RM15-8-000.	

Version	Date	Action	Change Tracking
2	May 13, 2021	Adopted by NERC Board of Trustees	Revised under Project 2015-09
2	March 4,2022	FERC Letter Order issued approving Docket No.RD22-2-000.	
2	March 4, 2022	Effective Date of Standard	April 1, 2024

PRC-026-2 – Attachment A

This standard applies to any protective functions which could trip instantaneously or with a time delay of less than 15 cycles on load current (i.e., "load-responsive") including, but not limited to:

- Phase distance
- Phase overcurrent
- Out-of-step tripping
- Loss-of-field

The following protection functions are excluded from Requirements of this standard:

- Relay elements supervised by power swing blocking
- Relay elements that are only enabled when other relays or associated systems fail. For example:
    - Overcurrent elements that are only enabled during loss of potential conditions.
    - Relay elements that are only enabled during a loss of communications
- Thermal emulation relays which are used in conjunction with dynamic Facility Ratings
- Relay elements associated with direct current (dc) lines
- Relay elements associated with dc converter transformers
- Phase fault detector relay elements employed to supervise other load-responsive phase distance elements (i.e., in order to prevent false operation in the event of a loss of potential)
- Relay elements associated with switch-onto-fault schemes
- Reverse power relay on the generator
- Generator relay elements that are armed only when the generator is disconnected from the system, (e.g., non-directional overcurrent elements used in conjunction with inadvertent energization schemes, and open breaker flashover schemes)
- Current differential relay, pilot wire relay, and phase comparison relay
- Voltage-restrained or voltage-controlled overcurrent relays

PRC-026-2 – Attachment B

Criterion A:

An impedance-based relay used for tripping is expected to not trip for a stable power swing, when the relay characteristic is completely contained within the unstable power swing region.[4] The unstable power swing region is formed by the union of three shapes in the impedance (R-X) plane; (1) a lower loss-of-synchronism circle based on a ratio of the sending-end to receiving-end voltages of 0.7; (2) an upper loss-of-synchronism circle based on a ratio of the sending-end to receiving-end voltages of 1.43; (3) a lens that connects the endpoints of the total system impedance (with the parallel transfer impedance removed) bounded by varying the sending-end and receiving-end voltages from 0.0 to 1.0 per unit, while maintaining a constant system separation angle across the total system impedance where:

1. The system separation angle is:
   - At least 120 degrees, or
   - An angle less than 120 degrees where a documented transient stability analysis demonstrates that the expected maximum stable separation angle is less than 120 degrees.
2. All generation is in service and all transmission BES Elements are in their normal operating state when calculating the system impedance.
3. Saturated (transient or sub-transient) reactance is used for all machines.

[4] Guidelines and Technical Basis, Figures 1 and 2.

PRC-026-2 – Attachment B

Criterion B:

The pickup of an overcurrent relay element used for tripping, that is above the calculated current value (with the parallel transfer impedance removed) for the conditions below:

1. The system separation angle is:
   - At least 120 degrees, or
   - An angle less than 120 degrees where a documented transient stability analysis demonstrates that the expected maximum stable separation angle is less than 120 degrees.
2. All generation is in service and all transmission BES Elements are in their normal operating state when calculating the system impedance.
3. Saturated (transient or sub-transient) reactance is used for all machines.
4. Both the sending-end and receiving-end voltages at 1.05 per unit.

Guidelines and Technical Basis

Introduction

The NERC System Protection and Control Subcommittee technical document, *Protection System Response to Power Swings*, August 2013,[5] ("PSRPS Report" or "report") was specifically prepared to support the development of this NERC Reliability Standard. The report provided a historical perspective on power swings as early as 1965 up through the approval of the report by the NERC Planning Committee. The report also addresses reliability issues regarding trade-offs between security and dependability of Protection Systems, considerations for this NERC Reliability Standard, and a collection of technical information about power swing characteristics and varying issues with practical applications and approaches to power swings. Of these topics, the report suggests an approach for this NERC Reliability Standard ("standard" or "PRC-026-2") which is consistent with addressing three regulatory directives in the FERC Order No. 733. The first directive concerns the need for "…protective relay systems that differentiate between faults and stable power swings and, when necessary, phases out protective relay systems that cannot meet this requirement."[6] Second, is "…to develop a Reliability Standard addressing undesirable relay operation due to stable power swings."[7] The third directive "…to consider "islanding" strategies that achieve the fundamental performance for all islands in developing the new Reliability Standard addressing stable power swings"[8] was considered during development of the standard.

The development of this standard implements the majority of the approaches suggested by the report. However, it is noted that the Reliability Coordinator and Transmission Planner have not been included in the standard's Applicability section (as suggested by the PSRPS Report). This is so that a single entity, the Planning Coordinator, may be the single source for identifying Elements according to Requirement R1. A single source will insure that multiple entities will not identify Elements in duplicate, nor will one entity fail to provide an Element because it believes the Element is being provided by another entity. The Planning Coordinator has, or has access to, the wide-area model and can correctly identify the Elements that may be susceptible to a stable or unstable power swing. Additionally, not including the Reliability Coordinator and Transmission Planner is consistent with the applicability of other relay loadability NERC Reliability Standards (e.g., PRC-023 and PRC-025). It is also consistent with the NERC Functional Model.

The phrase, "while maintaining dependable fault detection and dependable out-of-step tripping" in Requirement R3, describes that the Generator Owner and Transmission Owner are to comply with this standard while achieving its desired protection goals. Load-responsive protective relays, as addressed within this standard, may be intended to provide a variety of backup protection functions, both within the generating unit or generating plant and on the transmission system, and

[5] NERC System Protection and Control Subcommittee, *Protection System Response to Power Swings*, August 2013: http://www.nerc.com/comm/PC/System%20Protection%20and%20Control%20Subcommittee%20SPCS%2020/SPCS%20Power%20Swing%20Report_Final_20131015.pdf)

[6] Transmission Relay Loadability Reliability Standard, Order No. 733, P.150 FERC ¶ 61,221 (2010).

[7] Ibid. P.153.

[8] Ibid. P.162.

this standard is not intended to result in the loss of these protection functions. Instead, the Generator Owner and Transmission Owner must consider both the Requirements within this standard and its desired protection goals and perform modifications to its protective relays or protection philosophies as necessary to achieve both.

Power Swings

The IEEE Power System Relaying Committee WG D6 developed a technical document called *Power Swing and Out-of-Step Considerations on Transmission Lines* (July 2005) that provides background on power swings. The following are general definitions from that document:[9]

> Power Swing: a variation in three phase power flow which occurs when the generator rotor angles are advancing or retarding relative to each other in response to changes in load magnitude and direction, line switching, loss of generation, faults, and other system disturbances.
>
> Pole Slip: a condition whereby a generator, or group of generators, terminal voltage angles (or phases) go past 180 degrees with respect to the rest of the connected power system.
>
> Stable Power Swing: a power swing is considered stable if the generators do not slip poles and the system reaches a new state of equilibrium, i.e. an acceptable operating condition.
>
> Unstable Power Swing: a power swing that will result in a generator or group of generators experiencing pole slipping for which some corrective action must be taken.
>
> Out-of-Step Condition: Same as an unstable power swing.
>
> Electrical System Center or Voltage Zero: it is the point or points in the system where the voltage becomes zero during an unstable power swing.

Burden to Entities

The PSRPS Report provides a technical basis and approach for focusing on Protection Systems, which are susceptible to power swings, while achieving the purpose of the standard. The approach reduces the number of relays to which the PRC-026-2 Requirements would apply by first identifying the BES Element(s) on which load-responsive protective relays must be evaluated. The first step uses criteria to identify the Elements on which a Protection System is expected to be challenged by power swings. Of those Elements, the second step is to evaluate each load-responsive protective relay that is applied on each identified Element. Rather than requiring the Planning Coordinator or Transmission Planner to perform simulations to obtain information for each identified Element, the Generator Owner and Transmission Owner will reduce the need for simulation by comparing the load-responsive protective relay characteristic to specific criteria in PRC-026-2 – Attachment B.

[9] http://www.pes-psrc.org/Reports/Power%20Swing%20and%20OOS%20Considerations%20on%20Transmission%20Lines%20F..pdf.

Applicability

The standard is applicable to the Generator Owner, Planning Coordinator, and Transmission Owner entities. More specifically, the Generator Owner and Transmission Owner entities are applicable when applying load-responsive protective relays at the terminals of the applicable BES Elements. The standard is applicable to the following BES Elements: generators, transformers, and transmission lines. The Distribution Provider was considered for inclusion in the standard; however, it is not subject to the standard because this entity, by functional registration, would not own generators, transmission lines, or transformers other than load serving.

Load-responsive protective relays include any protective functions which could trip with or without time delay, on load current.

Requirement R1

The Planning Coordinator has a wide-area view and is in the position to identify what, if any, Elements meet the criteria. The criterion-based approach is consistent with the NERC System Protection and Control Subcommittee (SPCS) technical document, *Protection System Response to Power Swings (*August 2013),[10] which recommends a focused approach to determine an at-risk Element. Identification of Elements comes from the annual Planning Assessments pursuant to the transmission planning (i.e., "TPL") and other NERC Reliability Standards (e.g., PRC-006), and the standard is not requiring any other assessments to be performed by the Planning Coordinator. The required notification on a calendar year basis to the respective Generator Owner and Transmission Owner is sufficient because it is expected that the Planning Coordinator will make its notifications following the completion of its annual Planning Assessments. The Planning Coordinator will continue to provide notification of Elements on a calendar year basis even if a study is performed less frequently (e.g., PRC-006 – Automatic Underfrequency Load Shedding, which is five years) and has not changed. It is possible that a Planning Coordinator could utilize studies from a prior year in determining the necessary notifications pursuant to Requirement R1.

Criterion 1

The first criterion involves generator(s) where an angular stability constraint exists that is addressed by limiting the output of a generator or a Remedial Action Scheme (RAS) and those Elements terminating at the Transmission station associated with the generator(s). For example, a scheme to remove generation for specific conditions is implemented for a four-unit generating plant (1,100 MW). Two of the units are 500 MW each; one is connected to the 345 kV system and one is connected to the 230 kV system. The Transmission Owner has two 230 kV transmission lines and one 345 kV transmission line all terminating at the generating facility as well as a 345/230 kV autotransformer. The remaining 100 MW consists of two 50 MW combustion turbine (CT) units connected to four 66 kV transmission lines. The 66 kV transmission lines are not electrically joined to the 345 kV and 230 kV transmission lines at the plant site and are not subject to any generating output limitation or RAS. A stability constraint limits the output of the portion of the

[10] http://www.nerc.com/comm/PC/System%20Protection%20and%20Control%20Subcommittee%20SPCS%2020/SPCS%20Power%20Swing%20Report_Final_20131015.pdf)

plant affected by the RAS to 700 MW for an outage of the 345 kV transmission line. The RAS trips one of the 500 MW units to maintain stability for a loss of the 345 kV transmission line when the total output from both 500 MW units is above 700 MW. For this example, both 500 MW generating units and the associated generator step-up (GSU) transformers would be identified as Elements meeting this criterion. The 345/230 kV autotransformer, the 345 kV transmission line, and the two 230 kV transmission lines would also be identified as Elements meeting this criterion. The 50 MW combustion turbines and 66 kV transmission lines would not be identified pursuant to Criterion 1 because these Elements are not subject to any generating output limitation or RAS and do not terminate at the Transmission station associated with the generators that are subject to any generating output limitation or RAS.

Criterion 2

The second criterion involves Elements associated with angular instability identified in the Planning Assessments. For example, if Planning Assessments have identified that an angular instability could limit transfer capability on two long parallel 500 kV transmission lines to a maximum of 1,200 MW, and this limitation is based on angular instability resulting from a fault and subsequent loss of one of the two lines, then both lines would be identified as Elements meeting the criterion.

Criterion 3

The third criterion involves Elements that form the boundary of an island within an underfrequency load shedding (UFLS) design assessment. The criterion applies to islands identified based on application of the Planning Coordinator's criteria for identifying islands, where the island is formed by tripping the Elements based on angular instability. The criterion applies if the angular instability is modeled in the UFLS design assessment, or if the boundary is identified "off-line" (i.e., the Elements are selected based on angular instability considerations, but the Elements are tripped in the UFLS design assessment without modeling the initiating angular instability). In cases where an out-of-step condition is detected and tripping is initiated at an alternate location, the criterion applies to the Element on which the power swing is detected. The criterion does not apply to islands identified based on other considerations that do not involve angular instability, such as excessive loading, Planning Coordinator area boundary tie lines, or Balancing Authority boundary tie lines.

Criterion 4

The fourth criterion involves Elements identified in the most recent annual Planning Assessment where relay tripping occurs due to a stable or unstable[11] power swing during a simulated disturbance. The intent is for the Planning Coordinator to include any Element(s) where relay tripping was observed during simulations performed for the most recent annual Planning Assessment associated with the transmission planning TPL-001-4 Reliability Standard. Note that

[11] Refer to the "Justification for Including Unstable Power Swings in the Requirements" section.

relay tripping must be assessed within those annual Planning Assessments per TPL-001-4, R4, Part 4.3.1.3, which indicates that analysis shall include the "Tripping of Transmission lines and transformers where transient swings cause Protection System operation based on generic or actual relay models." Identifying such Elements according to Criterion 4 and notifying the respective Generator Owner and Transmission Owner will require that the owners of any load-responsive protective relay applied at the terminals of the identified Element evaluate the relay's susceptibility to tripping in response to a stable power swing.

Planning Coordinators have the discretion to determine whether the observed tripping for a power swing in its Planning Assessments occurs for valid contingencies and system conditions. The Planning Coordinator will address tripping that is observed in transient analyses on an individual basis; therefore, the Planning Coordinator is responsible for identifying the Elements based only on simulation results that are determined to be valid.

Due to the nature of how a Planning Assessment is performed, there may be cases where a previously-identified Element is not identified in the most recent annual Planning Assessment. If so, this is acceptable because the Generator Owner and Transmission Owner would have taken action upon the initial notification of the previously identified Element. When an Element is not identified in later Planning Assessments, the risk of load-responsive protective relays tripping in response to a stable power swing during non-Fault conditions would have already been assessed under Requirement R2 and mitigated according to Requirements R3 and R4 where the relays did not meet the PRC-026-2 – Attachment B criteria. According to Requirement R2, the Generator Owner and Transmission Owner are only required to re-evaluate each load-responsive protective relay for an identified Element where the evaluation has not been performed in the last five calendar years.

Although Requirement R1 requires the Planning Coordinator to notify the respective Generator Owner and Transmission Owner of any Elements meeting one or more of the four criteria, it does not preclude the Planning Coordinator from providing additional information, such as apparent impedance characteristics, in advance or upon request, that may be useful in evaluating protective relays. Generator Owners and Transmission Owners are able to complete protective relay evaluations and perform the required actions without additional information. The standard does not include any requirement for the entities to provide information that is already being shared or exchanged between entities for operating needs. While a Requirement has not been included for the exchange of information, entities should recognize that relay performance needs to be measured against the most current information.

Requirement R2

Requirement R2 requires the Generator Owner and Transmission Owner to evaluate its load-responsive protective relays to ensure that they are expected to not trip in response to stable power swings.

The PRC-026-2 – Attachment A lists the applicable load-responsive relays that must be evaluated which include phase distance, phase overcurrent, out-of-step tripping, and loss-of-field relay functions. Phase distance relays could include, but are not limited to, the following:

- Zone elements with instantaneous tripping or intentional time delays of less than 15 cycles
- Phase distance elements used in high-speed communication-aided tripping schemes including:
  - Directional Comparison Blocking (DCB) schemes
  - Directional Comparison Un-Blocking (DCUB) schemes
  - Permissive Overreach Transfer Trip (POTT) schemes
  - Permissive Underreach Transfer Trip (PUTT) schemes

A method is provided within the standard to support consistent evaluation by Generator Owners and Transmission Owners based on specified conditions. Once a Generator Owner or Transmission Owner is notified of Elements pursuant to Requirement R1, it has 12 full calendar months to determine if each Element's load-responsive protective relays meet the PRC-026-2 – Attachment B criteria, if the determination has not been performed in the last five calendar years. Additionally, each Generator Owner and Transmission Owner, that becomes aware of a generator, transformer, or transmission line BES Element that tripped in response to a stable or unstable power swing due to the operation of its protective relays pursuant to Requirement R2, Part 2.2, must perform the same PRC-026-2 – Attachment B criteria determination within 12 full calendar months.

Becoming Aware of an Element That Tripped in Response to a Power Swing

Part 2.2 in Requirement R2 is intended to initiate action by the Generator Owner and Transmission Owner when there is a known stable or unstable power swing and it resulted in the entity's Element tripping. The criterion starts with becoming aware of the event (i.e., power swing) and then any connection with the entity's Element tripping. By doing so, the focus is removed from the entity having to demonstrate that it made a determination whether a power swing was present for every Element trip. The basis for structuring the criterion in this manner is driven by the available ways that a Generator Owner and Transmission Owner could become aware of an Element that tripped in response to a stable or unstable power swing due to the operation of its protective relay(s).

Element trips caused by stable or unstable power swings, though infrequent, would be more common in a larger event. The identification of power swings will be revealed during an analysis of the event. Event analysis where an entity may become aware of a stable or unstable power swing could include internal analysis conducted by the entity, the entity's Protection System review following a trip, or a larger scale analysis by other entities. Event analysis could include involvement by the entity's Regional Entity, and in some cases NERC.

Information Common to Both Generation and Transmission Elements

The PRC-026-2 – Attachment A lists the load-responsive protective relays that are subject to this standard. Generator Owners and Transmission Owners may own load-responsive protective relays (e.g., distance relays) that directly affect generation or transmission BES Elements and will require analysis as a result of Elements being identified by the Planning Coordinator in Requirement R1

or the Generator Owner or Transmission Owner in Requirement R2. For example, distance relays owned by the Transmission Owner may be installed at the high-voltage side of the generator step-up (GSU) transformer (directional toward the generator) providing backup to generation protection. Generator Owners may have distance relays applied to backup transmission protection or backup protection to the GSU transformer. The Generator Owner may have relays installed at the generator terminals or the high-voltage side of the GSU transformer.

Exclusion of Time Based Load-Responsive Protective Relays

The purpose of the standard is "[t]o ensure that load-responsive protective relays are expected to not trip in response to stable power swings during non-Fault conditions." Load-responsive, high-speed tripping protective relays pose the highest risk of operating during a power swing. Because of this, high-speed tripping protective relays and relays with a time delay of less than 15 cycles are included in the standard; whereas other relays (i.e., Zones 2 and 3) with a time delay of 15 cycles or greater are excluded. The time delay used for exclusion on some load-responsive protective relays is based on the maximum expected time that load-responsive protective relays would be exposed to a stable power swing with a slow slip rate frequency.

In order to establish a time delay that distinguishes a high-risk load-responsive protective relay from one that has a time delay for tripping (lower-risk), a sample of swing rates were calculated based on a stable power swing entering and leaving the impedance characteristic as shown in Table 1. For a relay impedance characteristic that has a power swing entering and leaving, beginning at 90 degrees with a termination at 120 degrees before exiting the zone, the zone timer must be greater than the calculated time the stable power swing is inside the relay's operating zone to not trip in response to the stable power swing.

Eq. (1)
$$Zone\ timer > 2 \times \left(\frac{(120° - Angle\ of\ entry\ into\ the\ relay\ characteristic) \times 60}{(360 \times Slip\ Rate)}\right)$$

Table 1: Swing Rates

Zone Timer (Cycles)	Slip Rate (Hz)
10	1.00
15	0.67
20	0.50
30	0.33

With a minimum zone timer of 15 cycles, the corresponding slip rate of the system is 0.67 Hz. This represents an approximation of a slow slip rate during a system Disturbance. Longer time delays allow for slower slip rates.

Application to Transmission Elements

Criterion A in PRC-026-2 – Attachment B describes an unstable power swing region that is formed by the union of three shapes in the impedance (R-X) plane. The first shape is a lower loss-of-synchronism circle based on a ratio of the sending-end to receiving-end voltages of 0.7 (i.e., E_S / E_R = 0.7 / 1.0 = 0.7). The second shape is an upper loss-of-synchronism circle based on a ratio of the sending-end to receiving-end voltages of 1.43 (i.e., E_S / E_R = 1.0 / 0.7 = 1.43). The third shape is a lens that connects the endpoints of the total system impedance together by varying the sending-end and receiving-end system voltages from 0.0 to 1.0 per unit, while maintaining a constant system separation angle across the total system impedance (with the parallel transfer impedance removed—see Figures 1 through 5). The total system impedance is derived from a two-bus equivalent network and is determined by summing the sending-end source impedance, the line impedance (excluding the Thévenin equivalent transfer impedance), and the receiving-end source impedance as shown in Figures 6 and 7. Establishing the total system impedance provides a conservative condition that will maximize the security of the relay against various system conditions. The smallest total system impedance represents a condition where the size of the lens characteristic in the R-X plane is smallest and is a conservative operating point from the standpoint of ensuring a load-responsive protective relay is expected to not trip given a predetermined angular displacement between the sending-end and receiving-end voltages. The smallest total system impedance results when all generation is in service and all transmission BES Elements are modeled in their "normal" system configuration (PRC-026-2 – Attachment B, Criterion A). The parallel transfer impedance is removed to represent a likely condition where parallel Elements may be lost during the disturbance, and the loss of these Elements magnifies the sensitivity of the load-responsive relays on the parallel line by removing the "infeed effect" (i.e., the apparent impedance sensed by the relay is decreased as a result of the loss of the transfer impedance, thus making the relay more likely to trip for a stable power swing—See Figures 13 and 14).

The sending-end and receiving-end source voltages are varied from 0.7 to 1.0 per unit to form the lower and upper loss-of-synchronism circles. The ratio of these two voltages is used in the calculation of the loss-of-synchronism circles, and result in a ratio range from 0.7 to 1.43.

Eq. (2) $$\frac{E_S}{E_R} = \frac{0.7}{1.0} = 0.7$$

Eq. (3): $$\frac{E_S}{E_R} = \frac{1.0}{0.7} = 1.43$$

The internal generator voltage during severe power swings or transmission system fault conditions will be greater than zero due to voltage regulator support. The voltage ratio of 0.7 to 1.43 is chosen to be more conservative than the PRC-023[12] and PRC-025[13] NERC Reliability Standards where a lower bound voltage of 0.85 per unit voltage is used. A ±15% internal generator voltage range was chosen as a conservative voltage range for calculation of the voltage ratio used to calculate the loss-of-synchronism circles. For example, the voltage ratio using these voltages would result in a ratio range from 0.739 to 1.353.

[12] Transmission Relay Loadability

[13] Generator Relay Loadability

Eq. (4) $$\frac{E_S}{E_R} = \frac{0.85}{1.15} = 0.739$$ Eq. (5): $$\frac{E_S}{E_R} = \frac{1.15}{0.85} = 1.353$$

The lower ratio is rounded down to 0.7 to be more conservative, allowing a voltage range of 0.7 to 1.0 per unit to be used for the calculation of the loss-of-synchronism circles.[14]

When the parallel transfer impedance is included in the model, the division of current through the parallel transfer impedance path results in actual measured relay impedances that are larger than those measured when the parallel transfer impedance is removed (i.e., infeed effect), which would make it more likely for an impedance relay element to be completely contained within the unstable power swing region as shown in Figure 11. If the transfer impedance is included in the evaluation, a distance relay element could be deemed as meeting PRC-026-2 – Attachment B criteria and, in fact would be secure, assuming all Elements were in their normal state. In this case, the distance relay element could trip in response to a stable power swing during an actual event if the system was weakened (i.e., a higher transfer impedance) by the loss of a subset of lines that make up the parallel transfer impedance as shown in Figure 10. This could happen because the subset of lines that make up the parallel transfer impedance tripped on unstable swings, contained the initiating fault, and/or were lost due to operation of breaker failure or remote back-up protection schemes.

Table 10 shows the percent size increase of the lens shape as seen by the relay under evaluation when the parallel transfer impedance is included. The parallel transfer impedance has minimal effect on the apparent size of the lens shape as long as the parallel transfer impedance is at least 10 multiples of the parallel line impedance (less than 5% lens shape expansion), therefore, its removal has minimal impact, but results in a slightly more conservative, smaller lens shape. Parallel transfer impedances of 5 multiples of the parallel line impedance or less result in an apparent lens shape size of 10% or greater as seen by the relay. If two parallel lines and a parallel transfer impedance tie the sending-end and receiving-end buses together, the total parallel transfer impedance will be one or less multiples of the parallel line impedance, resulting in an apparent lens shape size of 45% or greater. It is a realistic contingency that the parallel line could be out-of-service, leaving the parallel transfer impedance making up the rest of the system in parallel with the line impedance. Since it is not known exactly which lines making up the parallel transfer impedance will be out of service during a major system disturbance, it is most conservative to assume that all of them are out, leaving just the line under evaluation in service.

Either the saturated transient or sub-transient direct axis reactance may be used for machines in the evaluation because they are smaller than the un-saturated reactances. Since saturated sub-transient generator reactances are smaller than the transient or synchronous reactances, the use of sub-transient reactances will result in a smaller source impedance and a smaller unstable power swing region in the graphical analysis as shown in Figures 8 and 9. Because power swings occur in a time frame where generator transient reactances will be prevalent, it is acceptable to use saturated transient reactances instead of saturated sub-transient reactances. Because some short-

[14] *Final Report on the August 14, 2003 Blackout in the United States and Canada: Causes and Recommendations*, April 2004, Section 6 (The Cascade Stage of the Blackout), p. 94 under "Why the Generators Tripped Off," states, "Some generator undervoltage relays were set to trip at or above 90% voltage. However, a motor stalls out at about 70% voltage and a motor starter contactor drops out around 75%, so if there is a compelling need to protect the turbine from the system the under-voltage trigger point should be no higher than 80%."

circuit models may not include transient reactances, the use of sub-transient reactances is also acceptable because it produces more conservative results. For this reason, either value is acceptable when determining the system source impedances (PRC-026-2 – Attachment B, Criterion A and B, No. 3).

Saturated reactances are used in short-circuit programs that produce the system impedance mentioned above. Planning and stability software generally use un-saturated reactances. Generator models used in transient stability analyses recognize that the extent of the saturation effect depends upon both rotor (field) and stator currents. Accordingly, they derive the effective saturated parameters of the machine at each instant by internal calculation from the specified (constant) unsaturated values of machine reactances and the instantaneous internal flux level. The specific assumptions regarding which inductances are affected by saturation, and the relative effect of that saturation, are different for the various generator models used. Thus, unsaturated values of all machine reactances are used in setting up planning and stability software data, and the appropriate set of open-circuit magnetization curve data is provided for each machine.

Saturated reactance values are smaller than unsaturated reactance values and are used in short-circuit programs owned by the Generator and Transmission Owners. Because of this, saturated reactance values are to be used in the development of the system source impedances.

The source or system equivalent impedances can be obtained by a number of different methods using commercially available short-circuit calculation tools.[15] Most short-circuit tools have a network reduction feature that allows the user to select the local and remote terminal buses to retain. The first method reduces the system to one that contains two buses, an equivalent generator at each bus (representing the source impedances at the sending-end and receiving-end), and two parallel lines; one being the line impedance of the protected line with relays being analyzed, the other being the parallel transfer impedance representing all other combinations of lines that connect the two buses together as shown in Figure 6. Another conservative method is to open both ends of the line being evaluated, and apply a three-phase bolted fault at each bus to determine the Thévenin equivalent impedance at each bus. The source impedances are set equal to the Thévenin equivalent impedances and will be less than or equal to the actual source impedances calculated by the network reduction method. Either method can be used to develop the system source impedances at both ends.

The two bullets of PRC-026-2 – Attachment B, Criterion A, No. 1, identify the system separation angles used to identify the size of the power swing stability boundary for evaluating load-responsive protective relay impedance elements. The first bullet of PRC-026-2 – Attachment B, Criterion A, No. 1 evaluates a system separation angle of at least 120 degrees that is held constant while varying the sending-end and receiving-end source voltages from 0.7 to 1.0 per unit, thus creating an unstable power swing region about the total system impedance in Figure 1. This unstable power swing region is compared to the tripping portion of the distance relay characteristic; that is, the portion that is not supervised by load encroachment, blinders, or some other form of supervision as shown in Figure 12 that restricts the distance element from tripping

[15] Demetrios A. Tziouvaras and Daqing Hou, Appendix in *Out-Of-Step Protection Fundamentals and Advancements,* April 17, 2014: https://www.selinc.com.

for heavy, balanced load conditions. If the tripping portion of the impedance characteristics are completely contained within the unstable power swing region, the relay impedance element meets Criterion A in PRC-026-2 – Attachment B. A system separation angle of 120 degrees was chosen for the evaluation because it is generally accepted in the industry that recovery for a swing beyond this angle is unlikely to occur.[16]

The second bullet of PRC-026-2 – Attachment B, Criterion A, No. 1 evaluates impedance relay elements at a system separation angle of less than 120 degrees, similar to the first bullet described above. An angle less than 120 degrees may be used if a documented stability analysis demonstrates that the power swing becomes unstable at a system separation angle of less than 120 degrees.

The exclusion of relay elements supervised by Power Swing Blocking (PSB) in PRC-026-2 – Attachment A allows the Generator Owner or Transmission Owner to exclude protective relay elements if they are blocked from tripping by PSB relays. A PSB relay applied and set according to industry accepted practices prevent supervised load-responsive protective relays from tripping in response to power swings. Further, PSB relays are set to allow dependable tripping of supervised elements. The criteria in PRC-026-2 – Attachment B specifically applies to unsupervised elements that could trip for stable power swings. Therefore, load-responsive protective relay elements supervised by PSB can be excluded from the Requirements of this standard.

[16] "The critical angle for maintaining stability will vary depending on the contingency and the system condition at the time the contingency occurs; however, the likelihood of recovering from a swing that exceeds 120 degrees is marginal and 120 degrees is generally accepted as an appropriate basis for setting out-of-step protection. Given the importance of separating unstable systems, defining 120 degrees as the critical angle is appropriate to achieve a proper balance between dependable tripping for unstable power swings and secure operation for stable power swings." NERC System Protection and Control Subcommittee, *Protection System Response to Power Swings*, August 2013: http://www.nerc.com/comm/PC/System%20Protection%20and%20Control%20Subcommittee%20SPCS%2020/SPCS%20Power%20Swing%20Report_Final_20131015.pdf), p. 28.

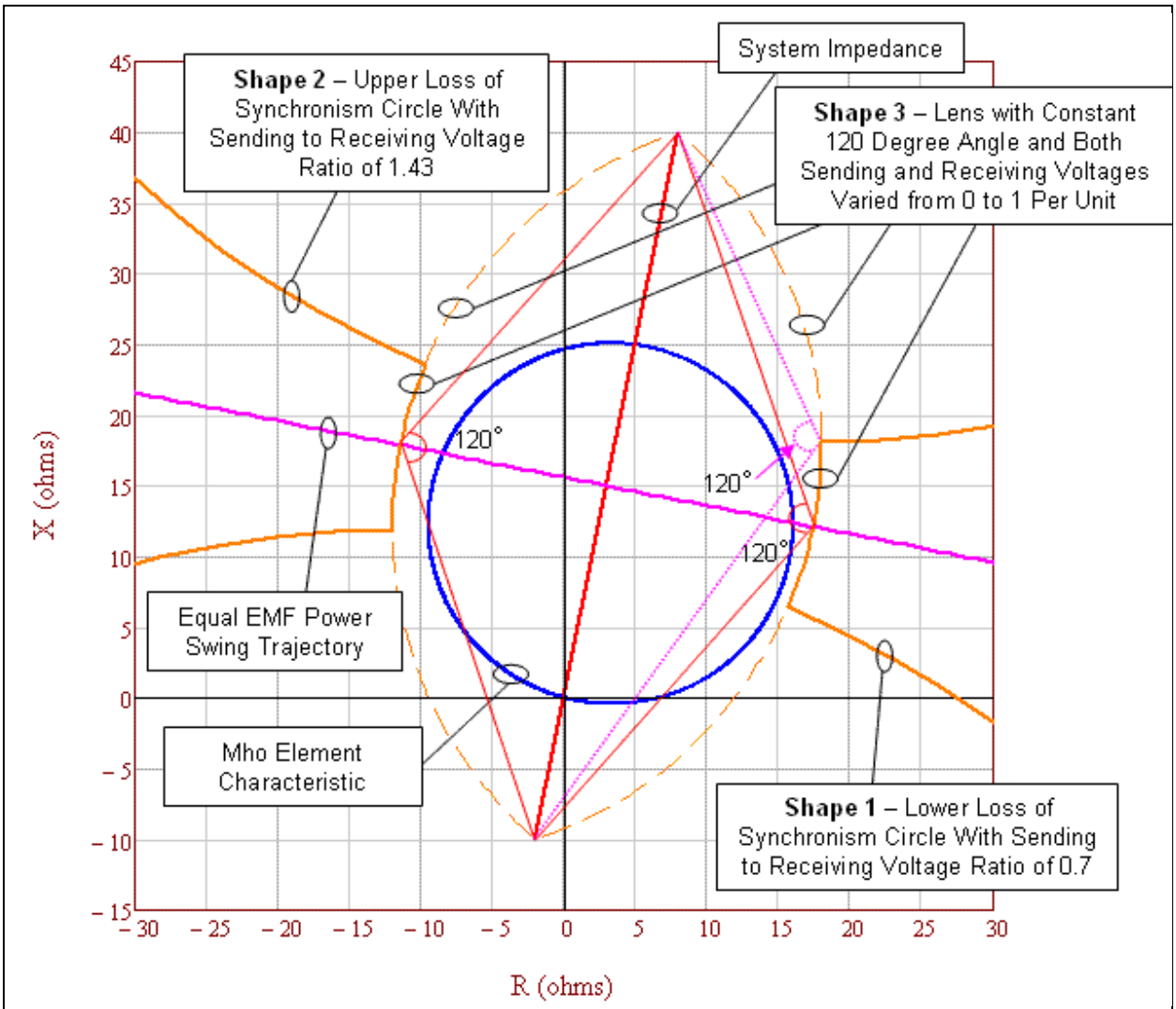

Figure 1: An enlarged graphic illustrating the unstable power swing region formed by the union of three shapes in the impedance (R-X) plane: Shape 1) Lower loss-of-synchronism circle, Shape 2) Upper loss-of-synchronism circle, and Shape 3) Lens. The mho element characteristic is completely contained within the unstable power swing region (i.e., it does not intersect any portion of the unstable power swing region), therefore it meets PRC-026-2 – Attachment B, Criterion A, No. 1.

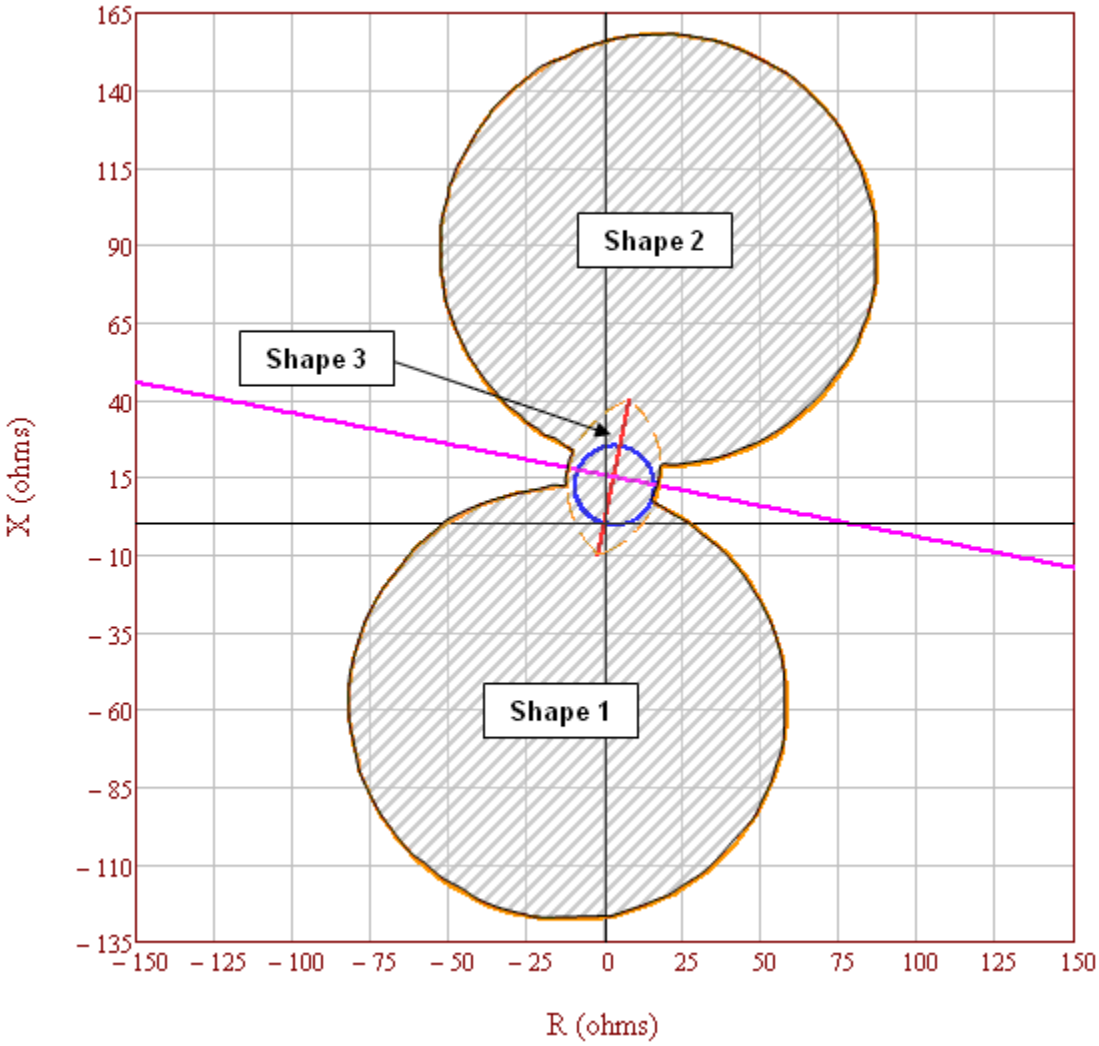

Figure 2: Full graphic of the unstable power swing region formed by the union of the three shapes in the impedance (R-X) plane: Shape 1) Lower loss-of-synchronism circle, Shape 2) Upper loss-of-synchronism circle, and Shape 3) Lens. The mho element characteristic is completely contained within the unstable power swing region, therefore it meets PRC-26-1 – Attachment B, Criterion A, No.1.

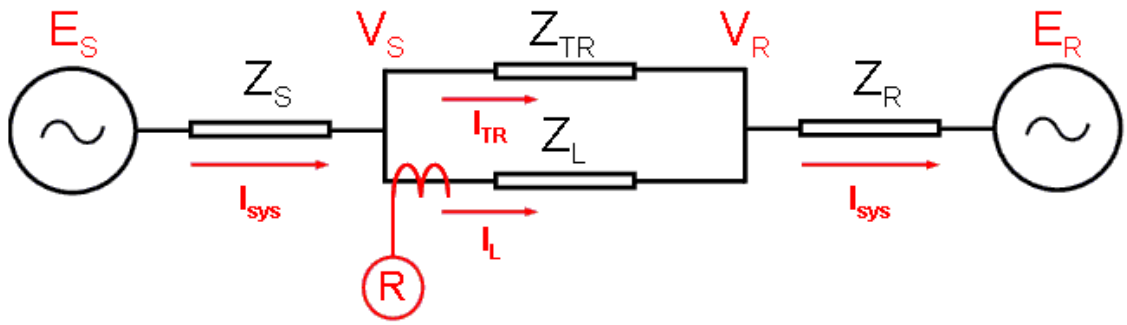

Figure 3: System impedances as seen by Relay R (voltage connections are not shown).

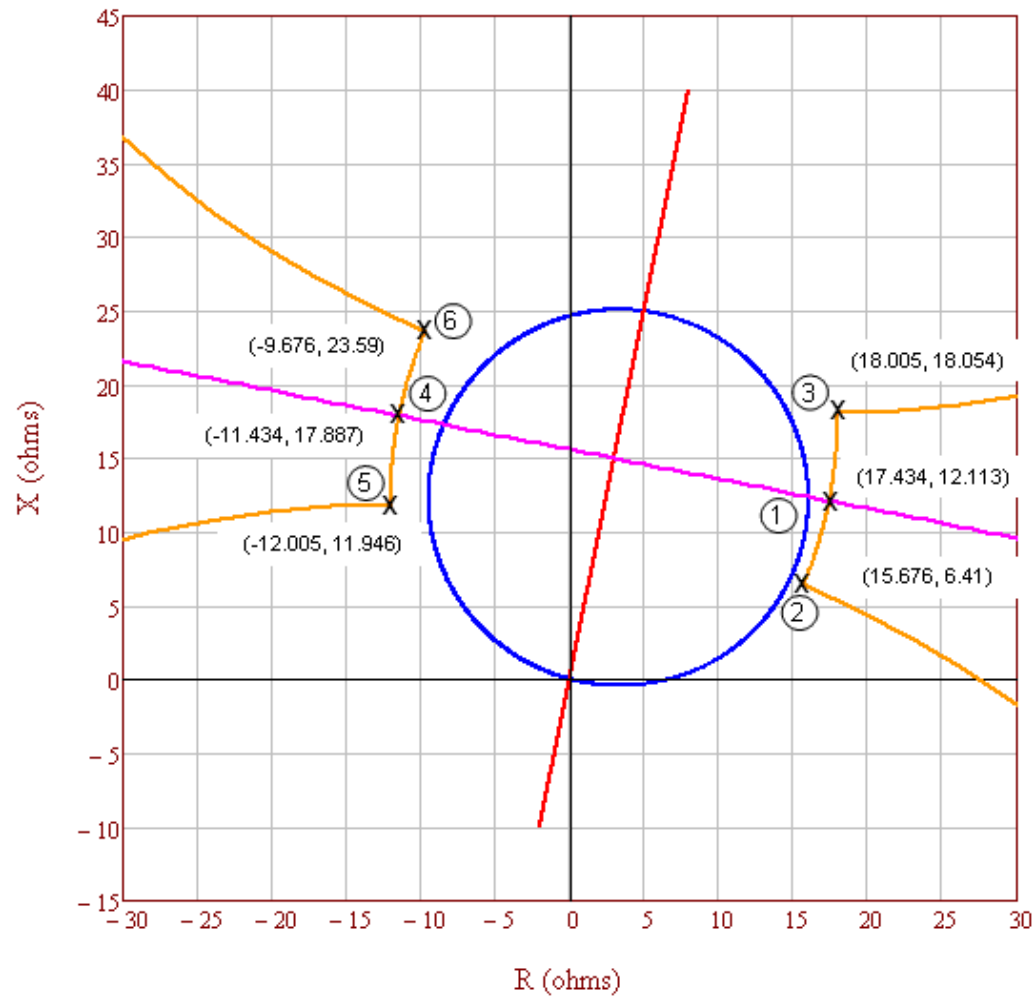

Figure 4: The defining unstable power swing region points where the lens shape intersects the lower and upper loss-of-synchronism circle shapes and where the lens intersects the equal EMF (electromotive force) power swing.

	Left Side Coordinates		Right Side Coordinates	
E_S / E_R Voltage Ratio	R	+ jX	R	+ jX
0.7	**-12.005**	**11.946**	**15.676**	**6.41**
0.72	-12.004	12.407	15.852	6.836
0.74	-11.996	12.857	16.018	7.255
0.76	-11.982	13.298	16.175	7.667
0.78	-11.961	13.729	16.321	8.073
0.8	-11.935	14.151	16.459	8.472
0.82	-11.903	14.563	16.589	8.865
0.84	-11.867	14.966	16.71	9.251
0.86	-11.826	15.361	16.824	9.631
0.88	-11.78	15.746	16.93	10.004
0.9	-11.731	16.123	17.03	10.371
0.92	-11.678	16.492	17.123	10.732
0.94	-11.621	16.852	17.209	11.086
0.96	-11.562	17.205	17.29	11.435
0.98	-11.499	17.55	17.364	11.777
1	**-11.434**	**17.887**	**17.434**	**12.113**
1.0286	-11.336	18.356	17.524	12.584
1.0572	-11.234	18.81	17.604	13.043
1.0858	-11.127	19.251	17.675	13.49
1.1144	-11.017	19.677	17.738	13.926
1.143	-10.904	20.091	17.792	14.351
1.1716	-10.788	20.491	17.84	14.766
1.2002	-10.67	20.88	17.88	15.17
1.2288	-10.55	21.256	17.914	15.564
1.2574	-10.428	21.621	17.942	15.948
1.286	-10.304	21.975	17.964	16.322
1.3146	-10.18	22.319	17.981	16.687
1.3432	-10.054	22.652	17.993	17.043
1.3718	-9.928	22.976	18.001	17.39
1.4004	-9.801	23.29	18.005	17.728
1.429	**-9.676**	**23.59**	**18.005**	**18.054**

Figure 5: Full table of 31 detailed lens shape point calculations. The bold highlighted rows correspond to the detailed calculations in Tables 2-7.

Table 2: Example Calculation (Lens Point 1)	
This example is for calculating the impedance the first point of the lens characteristic. Equal source voltages are used for the 230 kV (base) line with the sending-end voltage (E_S) leading the receiving-end voltage (E_R) by 120 degrees. See Figures 3 and 4.	
Eq. (6)	$E_S = \frac{V_{LL}\angle 120°}{\sqrt{3}}$

Table 2: Example Calculation (Lens Point 1)			
	$E_S = \frac{230{,}000\angle 120°\ V}{\sqrt{3}}$		
	$E_S = 132{,}791\angle 120°\ V$		
Eq. (7)	$E_R = \frac{V_{LL}\angle 0°}{\sqrt{3}}$		
	$E_R = \frac{230{,}000\angle 0°\ V}{\sqrt{3}}$		
	$E_R = 132{,}791\angle 0°\ V$		
Positive sequence impedance data (with transfer impedance Z_{TR} set to a large value).			
Given:	$Z_S = 2 + j10\ \Omega$	$Z_L = 4 + j20\ \Omega$	$Z_R = 4 + j20\ \Omega$
Given:	$Z_{TR} = Z_L \times 10^{10}\ \Omega$		
Total impedance between the generators.			
Eq. (8)	$Z_{total} = \frac{(Z_L \times Z_{TR})}{(Z_L + Z_{TR})}$		
	$Z_{total} = \frac{\left((4 + j20)\ \Omega \times (4 + j20) \times 10^{10}\ \Omega\right)}{\left((4 + j20)\ \Omega + (4 + j20) \times 10^{10}\ \Omega\right)}$		
	$Z_{total} = 4 + j20\ \Omega$		
Total system impedance.			
Eq. (9)	$Z_{sys} = Z_S + Z_{total} + Z_R$		
	$Z_{sys} = (2 + j10)\ \Omega + (4 + j20)\ \Omega + (4 + j20)\ \Omega$		
	$Z_{sys} = 10 + j50\ \Omega$		
Total system current from sending-end source.			
Eq. (10)	$I_{sys} = \frac{E_S - E_R}{Z_{sys}}$		
	$I_{sys} = \frac{132{,}791\angle 120°\ V - 132{,}791\angle 0°\ V}{(10 + j50\ )\Omega}$		
	$I_{sys} = 4{,}511\angle 71.3°\ A$		
The current, as measured by the relay on Z_L (Figure 3), is only the current flowing through that line as determined by using the current divider equation.			
Eq. (11)	$I_L = I_{sys} \times \frac{Z_{TR}}{Z_L + Z_{TR}}$		

Table 2: Example Calculation (Lens Point 1)	
	$I_L = 4{,}511\angle 71.3°\ A \times \dfrac{(4+j20)\times 10^{10}\ \Omega}{(4+j20)\ \Omega + (4+j20)\times 10^{10}\ \Omega}$
	$I_L = 4{,}511\angle 71.3°\ A$
The voltage, as measured by the relay on Z_L (Figure 3), is the voltage drop from the sending-end source through the sending-end source impedance.	
Eq. (12)	$V_S = E_S - (Z_S \times I_{sys})$
	$V_S = 132{,}791\angle 120°\ V - [(2+j10)\ \Omega \times 4{,}511\angle 71.3°\ A]$
	$V_S = 95{,}757\angle 106.1°\ V$
The impedance seen by the relay on Z_L.	
Eq. (13)	$Z_{L-Relay} = \dfrac{V_S}{I_L}$
	$Z_{L-Relay} = \dfrac{95{,}757\angle 106.1°\ V}{4{,}511\angle 71.3°\ A}$
	$Z_{L-Relay} = 17.434 + j12.113\ \Omega$

Table 3: Example Calculation (Lens Point 2)			
This example is for calculating the impedance second point of the lens characteristic. Unequal source voltages are used for the 230 kV (base) line with the sending-end voltage (E_S) at 70% of the receiving-end voltage (E_R) and leading the receiving-end voltage by 120 degrees. See Figures 3 and 4.			
Eq. (14)	$E_S = \dfrac{V_{LL}\angle 120°}{\sqrt{3}} \times 70\%$		
	$E_S = \dfrac{230{,}000\angle 120°\ V}{\sqrt{3}} \times 0.70$		
	$E_S = 92{,}953.7\angle 120°\ V$		
Eq. (15)	$E_R = \dfrac{V_{LL}\angle 0°}{\sqrt{3}}$		
	$E_R = \dfrac{230{,}000\angle 0°\ V}{\sqrt{3}}$		
	$E_R = 132{,}791\angle 0°\ V$		
Positive sequence impedance data (with transfer impedance Z_{TR} set to a large value).			
Given:	$Z_S = 2 + j10\ \Omega$	$Z_L = 4 + j20\ \Omega$	$Z_R = 4 + j20\ \Omega$
Given:	$Z_{TR} = Z_L \times 10^{10}\ \Omega$		

Table 3: Example Calculation (Lens Point 2)	
Total impedance between the generators.	
Eq. (16)	$Z_{total} = \frac{(Z_L \times Z_{TR})}{(Z_L + Z_{TR})}$
	$Z_{total} = \frac{\left((4 + j20)\ \Omega \times (4 + j20) \times 10^{10}\ \Omega\right)}{\left((4 + j20)\ \Omega + (4 + j20) \times 10^{10}\ \Omega\right)}$
	$Z_{total} = 4 + j20\ \Omega$
Total system impedance.	
Eq. (17)	$Z_{sys} = Z_S + Z_{total} + Z_R$
	$Z_{sys} = (2 + j10)\ \Omega + (4 + j20)\ \Omega + (4 + j20)\ \Omega$
	$Z_{sys} = 10 + j50\ \Omega$
Total system current from sending-end source.	
Eq. (18)	$I_{sys} = \frac{E_S - E_R}{Z_{sys}}$
	$I_{sys} = \frac{92{,}953.7\angle 120°\ V - 132{,}791\angle 0°\ V}{(10 + j50)\ \Omega}$
	$I_{sys} = 3{,}854\angle 77°\ A$
The current, as measured by the relay on Z_L (Figure 3), is only the current flowing through that line as determined by using the current divider equation.	
Eq. (19)	$I_L = I_{sys} \times \frac{Z_{TR}}{Z_L + Z_{TR}}$
	$I_L = 3{,}854\angle 77°\ A \times \frac{(4 + j20) \times 10^{10}\ \Omega}{(4 + j20)\ \Omega + (4 + j20) \times 10^{10}\ \Omega}$
	$I_L = 3{,}854\angle 77°\ A$
The voltage, as measured by the relay on Z_L (Figure 3), is the voltage drop from the sending-end source through the sending-end source impedance.	
Eq. (20)	$V_S = E_S - \left(Z_S \times I_{sys}\right)$
	$V_S = 92{,}953\angle 120°\ V - [(2 + j10\ )\Omega \times 3{,}854\angle 77°\ A]$
	$V_S = 65{,}271\angle 99°\ V$
The impedance seen by the relay on Z_L.	
Eq. (21)	$Z_{L-Relay} = \frac{V_S}{I_L}$

Table 3: Example Calculation (Lens Point 2)	
	$Z_{L-Relay} = \frac{65{,}271\angle 99°\ V}{3{,}854\angle 77°\ A}$
	$Z_{L-Relay} = 15.676 + j6.41\ \Omega$

Table 4: Example Calculation (Lens Point 3)			
This example is for calculating the impedance third point of the lens characteristic. Unequal source voltages are used for the 230 kV (base) line with the receiving-end voltage (E_R) at 70% of the sending-end voltage (E_S) and the sending-end voltage leading the receiving-end voltage by 120 degrees. See Figures 3 and 4.			
Eq. (22)	$E_S = \frac{V_{LL}\angle 120°}{\sqrt{3}}$		
	$E_S = \frac{230{,}000\angle 120°\ V}{\sqrt{3}}$		
	$E_S = 132{,}791\angle 120°\ V$		
Eq. (23)	$E_R = \frac{V_{LL}\angle 0°}{\sqrt{3}} \times 70\%$		
	$E_R = \frac{230{,}000\angle 0°\ V}{\sqrt{3}} \times 0.70$		
	$E_R = 92{,}953.7\angle 0°\ V$		
Positive sequence impedance data (with transfer impedance Z_{TR} set to a large value).			
Given:	$Z_S = 2 + j10\ \Omega$	$Z_L = 4 + j20\ \Omega$	$Z_R = 4 + j20\ \Omega$
Given:	$Z_{TR} = Z_L \times 10^{10}\ \Omega$		
Total impedance between the generators.			
Eq. (24)	$Z_{total} = \frac{(Z_L \times Z_{TR})}{(Z_L + Z_{TR})}$		
	$Z_{total} = \frac{\left((4 + j20)\ \Omega \times (4 + j20) \times 10^{10}\ \Omega\right)}{\left((4 + j20)\ \Omega + (4 + j20) \times 10^{10}\ \Omega\right)}$		
	$Z_{total} = 4 + j20\ \Omega$		
Total system impedance.			
Eq. (25)	$Z_{sys} = Z_S + Z_{total} + Z_R$		
	$Z_{sys} = (2 + j10)\ \Omega + (4 + j20)\ \Omega + (4 + j20)\ \Omega$		
	$Z_{sys} = 10 + j50\ \Omega$		

Table 4: Example Calculation (Lens Point 3)	
Total system current from sending-end source.	
Eq. (26)	$I_{sys} = \frac{E_S - E_R}{Z_{sys}}$
	$I_{sys} = \frac{132{,}791\angle 120°\ V - 92{,}953.7\angle 0°\ V}{(10 + j50)\ \Omega}$
	$I_{sys} = 3{,}854\angle 65.5°\ A$
The current, as measured by the relay on Z_L (Figure 3), is only the current flowing through that line as determined by using the current divider equation.	
Eq. (27)	$I_L = I_{sys} \times \frac{Z_{TR}}{Z_L + Z_{TR}}$
	$I_L = 3{,}854\angle 65.5°\ A \times \frac{(4 + j20) \times 10^{10}\ \Omega}{(4 + j20)\ \Omega + (4 + j20) \times 10^{10}\ \Omega}$
	$I_L = 3{,}854\angle 65.5°\ A$
The voltage, as measured by the relay on Z_L (Figure 3), is the voltage drop from the sending-end source through the sending-end source impedance.	
Eq. (28)	$V_S = E_S - (Z_S \times I_L)$
	$V_S = 132{,}791\angle 120°\ V - [(2 + j10)\ \Omega \times 3{,}854\angle 65.5°\ A]$
	$V_S = 98{,}265\angle 110.6°\ V$
The impedance seen by the relay on Z_L.	
Eq. (29)	$Z_{L-Relay} = \frac{V_S}{I_L}$
	$Z_{L-Relay} = \frac{98{,}265\angle 110.6°\ V}{3{,}854\angle 65.5°\ A}$
	$Z_{L-Relay} = 18.005 + j18.054\ \Omega$

Table 5: Example Calculation (Lens Point 4)	
This example is for calculating the impedance fourth point of the lens characteristic. Equal source voltages are used for the 230 kV (base) line with the sending-end voltage (E_S) leading the receiving-end voltage (E_R) by 240 degrees. See Figures 3 and 4.	
Eq. (30)	$E_S = \frac{V_{LL}\angle 240°}{\sqrt{3}}$
	$E_S = \frac{230{,}000\angle 240°\ V}{\sqrt{3}}$

Table 5: Example Calculation (Lens Point 4)			
	$E_S = 132{,}791\angle 240°\ V$		
Eq. (31)	$E_R = \frac{V_{LL}\angle 0°}{\sqrt{3}}$		
	$E_R = \frac{230{,}000\angle 0°\ V}{\sqrt{3}}$		
	$E_R = 132{,}791\angle 0°\ V$		
Positive sequence impedance data (with transfer impedance Z_{TR} set to a large value).			
Given:	$Z_S = 2 + j10\ \Omega$	$Z_L = 4 + j20\ \Omega$	$Z_R = 4 + j20\ \Omega$
Given:	$Z_{TR} = Z_L \times 10^{10}\ \Omega$		
Total impedance between the generators.			
Eq. (32)	$Z_{total} = \frac{(Z_L \times Z_{TR})}{(Z_L + Z_{TR})}$		
	$Z_{total} = \frac{\left((4 + j20)\ \Omega \times (4 + j20) \times 10^{10}\ \Omega\right)}{\left((4 + j20)\ \Omega + (4 + j20) \times 10^{10}\ \Omega\right)}$		
	$Z_{total} = 4 + j20\ \Omega$		
Total system impedance.			
Eq. (33)	$Z_{sys} = Z_S + Z_{total} + Z_R$		
	$Z_{sys} = (2 + j10)\ \Omega + (4 + j20)\ \Omega + (4 + j20)\ \Omega$		
	$Z_{sys} = 10 + j50\ \Omega$		
Total system current from sending-end source.			
Eq. (34)	$I_{sys} = \frac{E_S - E_R}{Z_{sys}}$		
	$I_{sys} = \frac{132{,}791\angle 240°\ V - 132{,}791\angle 0°\ V}{(10 + j50\ )\Omega}$		
	$I_{sys} = 4{,}511\angle 131.3°\ A$		
The current, as measured by the relay on Z_L (Figure 3), is only the current flowing through that line as determined by using the current divider equation.			
Eq. (35)	$I_L = I_{sys} \times \frac{Z_{TR}}{Z_L + Z_{TR}}$		
	$I_L = 4{,}511\angle 131.1°\ A \times \frac{(4 + j20) \times 10^{10}\ \Omega}{(4 + j20)\ \Omega + (4 + j20) \times 10^{10}\ \Omega}$		
	$I_L = 4{,}511\angle 131.1°\ A$		

Table 5: Example Calculation (Lens Point 4)	
The voltage, as measured by the relay on Z_L (Figure 3), is the voltage drop from the sending-end source through the sending-end source impedance.	
Eq. (36)	$V_S = E_S - (Z_S \times I_L)$
	$V_S = 132{,}791\angle 240°\ V - [(2 + j10\ )\ \Omega \times 4{,}511\angle 131.1°\ A]$
	$V_S = 95{,}756\angle -106.1°\ V$
The impedance seen by the relay on Z_L.	
Eq. (37)	$Z_{L-Relay} = \frac{V_S}{I_L}$
	$Z_{L-Relay} = \frac{95{,}756\angle -106.1°\ V}{4{,}511\angle 131.1°\ A}$
	$Z_{L-Relay} = -11.434 + j17.887\ \Omega$

Table 6: Example Calculation (Lens Point 5)			
This example is for calculating the impedance fifth point of the lens characteristic. Unequal source voltages are used for the 230 kV (base) line with the sending-end voltage (E_S) at 70% of the receiving-end voltage (E_R) and leading the receiving-end voltage by 240 degrees. See Figures 3 and 4.			
Eq. (38)	$E_S = \frac{V_{LL}\angle 240°}{\sqrt{3}} \times 70\%$		
	$E_S = \frac{230{,}000\angle 240°\ V}{\sqrt{3}} \times 0.70$		
	$E_S = 92{,}953.7\angle 240°\ V$		
Eq. (39)	$E_R = \frac{V_{LL}\angle 0°}{\sqrt{3}}$		
	$E_R = \frac{230{,}000\angle 0°\ V}{\sqrt{3}}$		
	$E_R = 132{,}791\angle 0°\ V$		
Positive sequence impedance data (with transfer impedance Z_{TR} set to a large value).			
Given:	$Z_S = 2 + j10\ \Omega$	$Z_L = 4 + j20\ \Omega$	$Z_R = 4 + j20\ \Omega$
Given:	$Z_{TR} = Z_L \times 10^{10}\ \Omega$		
Total impedance between the generators.			
Eq. (40)	$Z_{total} = \frac{(Z_L \times Z_{TR})}{(Z_L + Z_{TR})}$		

Table 6: Example Calculation (Lens Point 5)	
	$Z_{total} = \frac{\left((4+j20)\ \Omega \times (4+j20) \times 10^{10}\ \Omega\right)}{\left((4+j20)\ \Omega + (4+j20) \times 10^{10}\ \Omega\right)}$
	$Z_{total} = 4 + j20\ \Omega$
Total system impedance.	
Eq. (41)	$Z_{sys} = Z_S + Z_{total} + Z_R$
	$Z_{sys} = (2 + j10\ \Omega) + (4 + j20\ \Omega) + (4 + j20\ \Omega)$
	$Z_{sys} = 10 + j50\ \Omega$
Total system current from sending-end source.	
Eq. (42)	$I_{sys} = \frac{E_S - E_R}{Z_{sys}}$
	$I_{sys} = \frac{92{,}953.7\angle 240°\ V - 132{,}791\angle 0°\ V}{10 + j50\ \Omega}$
	$I_{sys} = 3{,}854\angle 125.5°\ A$
The current, as measured by the relay on Z_L (Figure 3), is only the current flowing through that line as determined by using the current divider equation.	
Eq. (43)	$I_L = I_{sys} \times \frac{Z_{TR}}{Z_L + Z_{TR}}$
	$I_L = 3{,}854\angle 125.5°\ A \times \frac{(4+j20) \times 10^{10}\ \Omega}{(4+j20)\ \Omega + (4+j20) \times 10^{10}\ \Omega}$
	$I_L = 3{,}854\angle 125.5°\ A$
The voltage, as measured by the relay on Z_L (Figure 3), is the voltage drop from the sending-end source through the sending-end source impedance.	
Eq. (44)	$V_S = E_S - (Z_S \times I_L)$
	$V_S = 92{,}953.7\angle 240°\ V - [(2 + j10\ )\ \Omega \times 3{,}854\angle 125.5°\ A]$
	$V_S = 65{,}270.5\angle -99.4°\ V$
The impedance seen by the relay on Z_L.	
Eq. (45)	$Z_{L-Relay} = \frac{V_S}{I_L}$
	$Z_{L-Relay} = \frac{65{,}270.5\angle -99.4°\ V}{3{,}854\angle 125.5°\ A}$
	$Z_{L-Relay} = -12.005 + j11.946\ \Omega$

Table 7: Example Calculation (Lens Point 6)			
This example is for calculating the impedance sixth point of the lens characteristic. Unequal source voltages are used for the 230 kV (base) line with the receiving-end voltage (E_R) at 70% of the sending-end voltage (E_S) and the sending-end voltage leading the receiving-end voltage by 240 degrees. See Figures 3 and 4.			
Eq. (46)	$E_S = \frac{V_{LL}\angle 240°}{\sqrt{3}}$		
	$E_S = \frac{230{,}000\angle 240°\ V}{\sqrt{3}}$		
	$E_S = 132{,}791\angle 240°\ V$		
Eq. (47)	$E_R = \frac{V_{LL}\angle 0°}{\sqrt{3}} \times 70\%$		
	$E_R = \frac{230{,}000\angle 0°\ V}{\sqrt{3}} \times 0.70$		
	$E_R = 92{,}953.7\angle 0°\ V$		
Positive sequence impedance data (with transfer impedance Z_{TR} set to a large value).			
Given:	$Z_S = 2 + j10\ \Omega$	$Z_L = 4 + j20\ \Omega$	$Z_R = 4 + j20\ \Omega$
Given:	$Z_{TR} = Z_L \times 10^{10}\ \Omega$		
Total impedance between the generators.			
Eq. (48)	$Z_{total} = \frac{(Z_L \times Z_{TR})}{(Z_L + Z_{TR})}$		
	$Z_{total} = \frac{\left((4 + j20)\ \Omega \times (4 + j20) \times 10^{10}\ \Omega\right)}{\left((4 + j20)\ \Omega + (4 + j20) \times 10^{10}\ \Omega\right)}$		
	$Z_{total} = 4 + j20\ \Omega$		
Total system impedance.			
Eq. (49)	$Z_{sys} = Z_S + Z_{total} + Z_R$		
	$Z_{sys} = (2 + j10)\ \Omega + (4 + j20)\ \Omega + (4 + j20)\ \Omega$		
	$Z_{sys} = 10 + j50\ \Omega$		
Total system current from sending-end source.			
Eq. (50)	$I_{sys} = \frac{E_S - E_R}{Z_{sys}}$		
	$I_{sys} = \frac{132{,}791\angle 240°\ V - 92{,}953.7\angle 0°\ V}{10 + j50\ \Omega}$		
	$I_{sys} = 3{,}854\angle 137.1°\ A$		

Table 7: Example Calculation (Lens Point 6)	
The current, as measured by the relay on Z_L (Figure 3), is only the current flowing through that line as determined by using the current divider equation.	
Eq. (51)	$I_L = I_{sys} \times \frac{Z_{TR}}{Z_L + Z_{TR}}$
	$I_L = 3{,}854\angle 137.1° \, A \times \frac{(4 + j20) \times 10^{10} \, \Omega}{(4 + j20) \, \Omega + (4 + j20) \times 10^{10} \, \Omega}$
	$I_L = 3{,}854\angle 137.1° \, A$
The voltage, as measured by the relay on Z_L (Figure 3), is the voltage drop from the sending-end source through the sending-end source impedance.	
Eq. (52)	$V_S = E_S - (Z_S \times I_L)$
	$V_S = 132{,}791\angle 240° \, V - [(2 + j10 \,) \, \Omega \times 3{,}854\angle 137.1° \, A]$
	$V_S = 98{,}265\angle -110.6° \, V$
The impedance seen by the relay on Z_L.	
Eq. (53)	$Z_{L-Relay} = \frac{V_S}{I_L}$
	$Z_{L-Relay} = \frac{98{,}265\angle -110.6° \, V}{3{,}854\angle 137.1° \, A}$
	$Z_{L-Relay} = -9.676 + j23.59 \, \Omega$

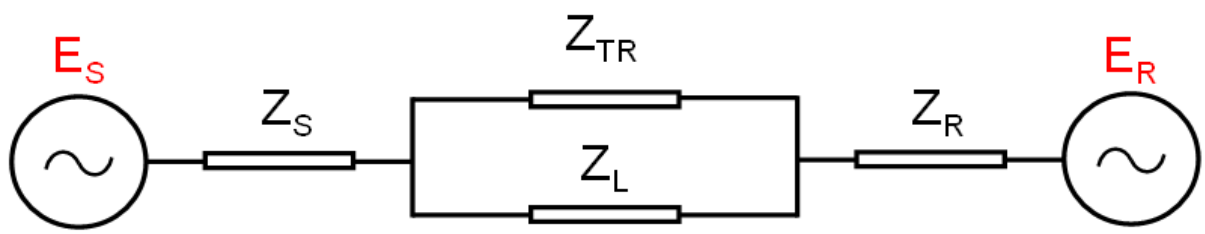

$$Z_{Total} = Z_S + \frac{Z_L \cdot Z_{TR}}{Z_L + Z_{TR}} + Z_R$$

Figure 6: Reduced two bus system with sending-end source impedance Z_S, receiving-end source impedance Z_R, line impedance Z_L, and parallel transfer impedance Z_{TR}.

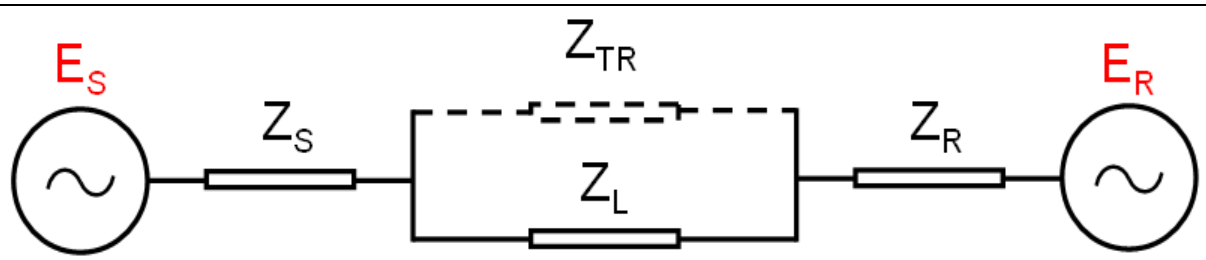

$$Z_{sys} = Z_S + Z_L + Z_R$$

Figure 7: Reduced two bus system with sending-end source impedance Z_S, receiving-end source impedance Z_R, and line impedance Z_L with the parallel transfer impedance Z_{TR} removed.

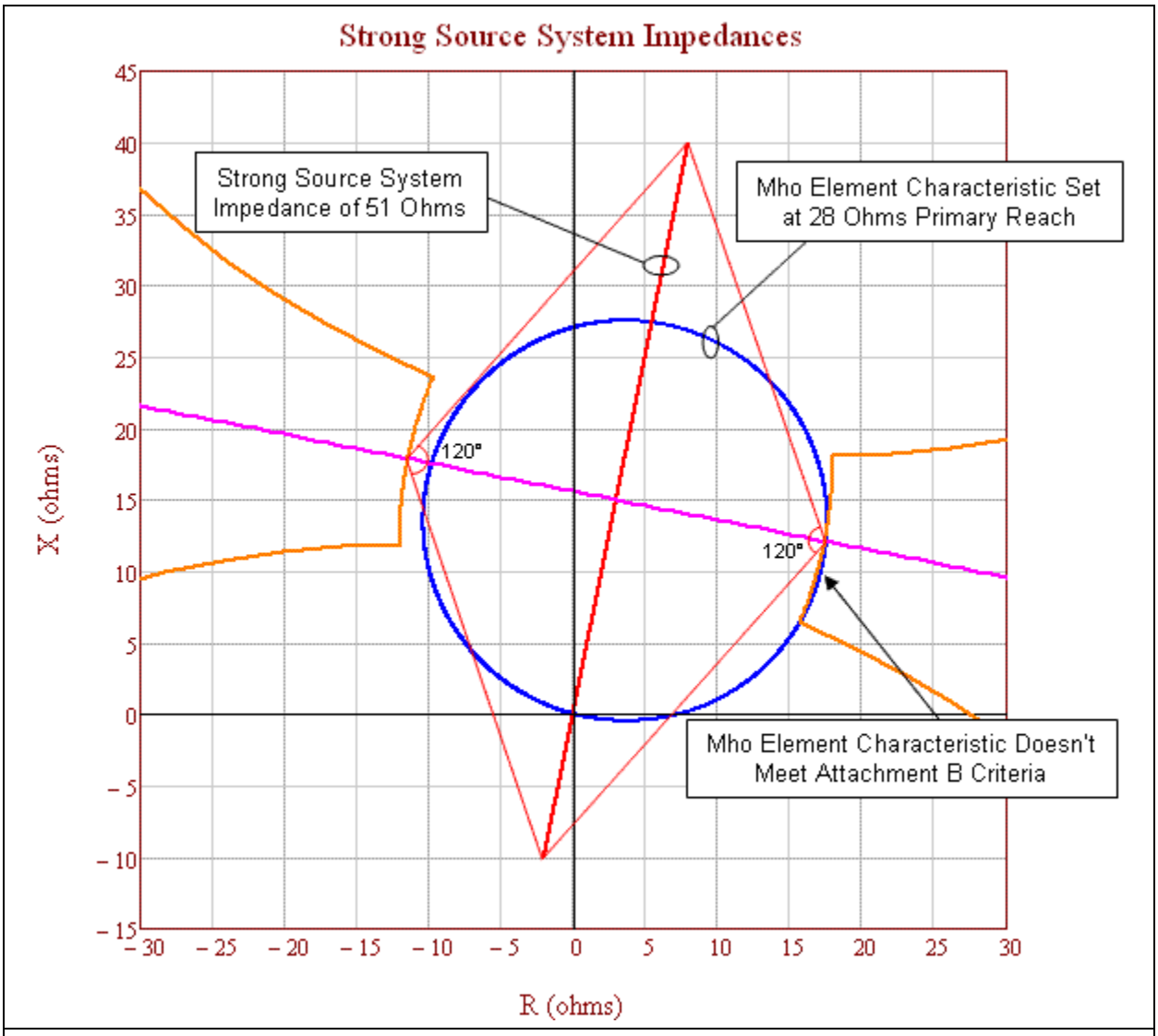

Figure 8: A strong-source system with a line impedance of Z_L = 20.4 ohms (i.e., the thicker red line). This mho element characteristic (i.e., the blue circle) does not meet the PRC-026-2 – Attachment B, Criterion A because it is not completely contained within the unstable power swing region (i.e., the orange characteristic).

Figure 8 above represents a heavily-loaded system with all generation in service and all transmission BES Elements in their normal operating state. The mho element characteristic (set at 137% of Z_L) extends into the unstable power swing region (i.e., the orange characteristic). Using the strongest source system is more conservative because it shrinks the unstable power swing region, bringing it closer to the mho element characteristic. This figure also graphically represents the effect of a system strengthening over time and this is the reason for re-evaluation if the relay has not been evaluated in the last five calendar years. Figure 9 below depicts a relay that meets the PRC-026-2 – Attachment B, Criterion A. Figure 8 depicts the same relay with the same setting five years later, where each source has strengthened by about 10% and now the same mho element characteristic does not meet Criterion A.

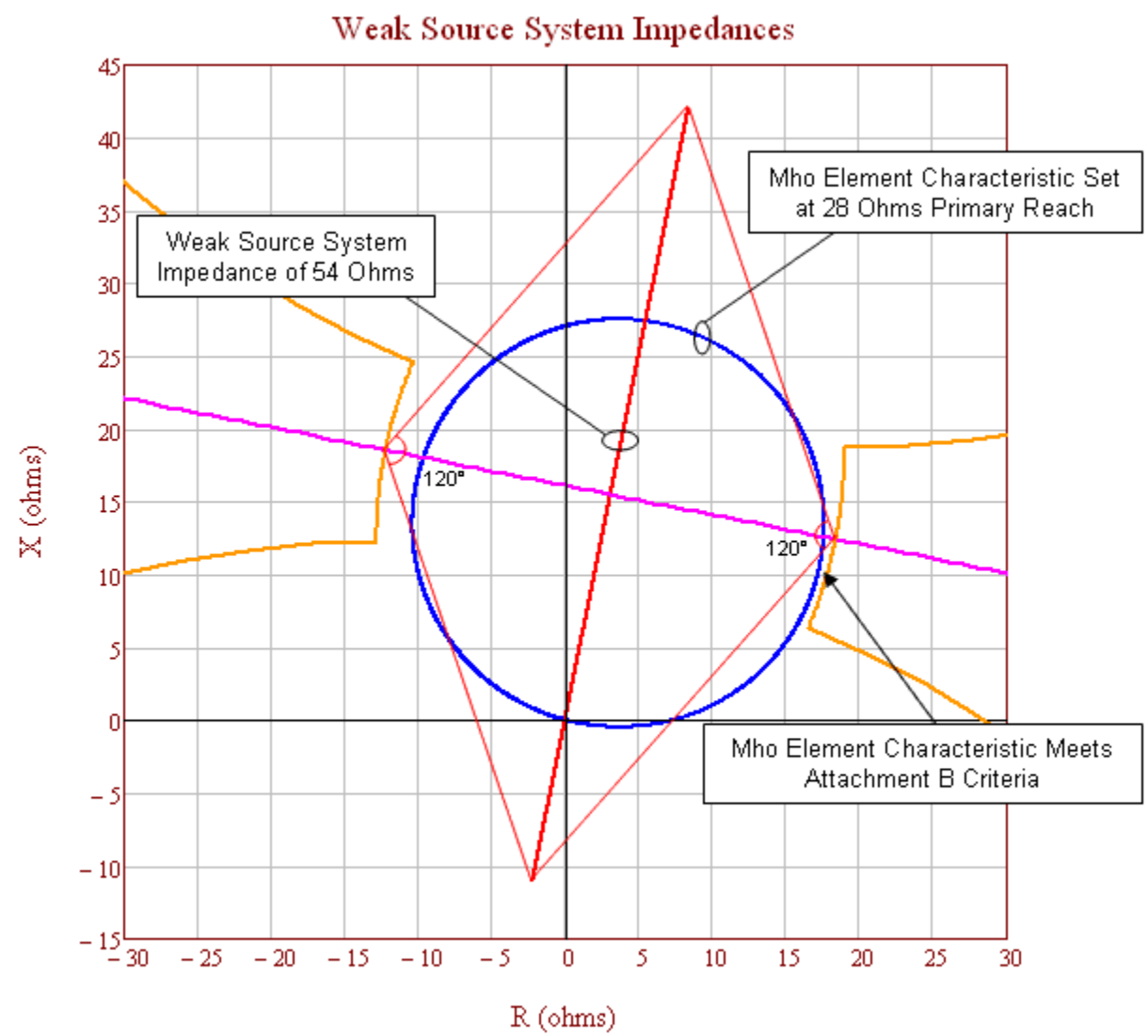

Figure 9: A weak-source system with a line impedance of Z_L = 20.4 ohms (i.e., the thicker red line). This mho element characteristic (i.e., the blue circle) meets the PRC-026-2 – Attachment B, Criterion A because it is completely contained within the unstable power swing region (i.e., the orange characteristic).

Figure 9 above represents a lightly-loaded system, using a minimum generation profile. The mho element characteristic (set at 137% of Z_L) does not extend into the unstable power swing region (i.e., the orange characteristic). Using a weaker source system expands the unstable power swing region away from the mho element characteristic.

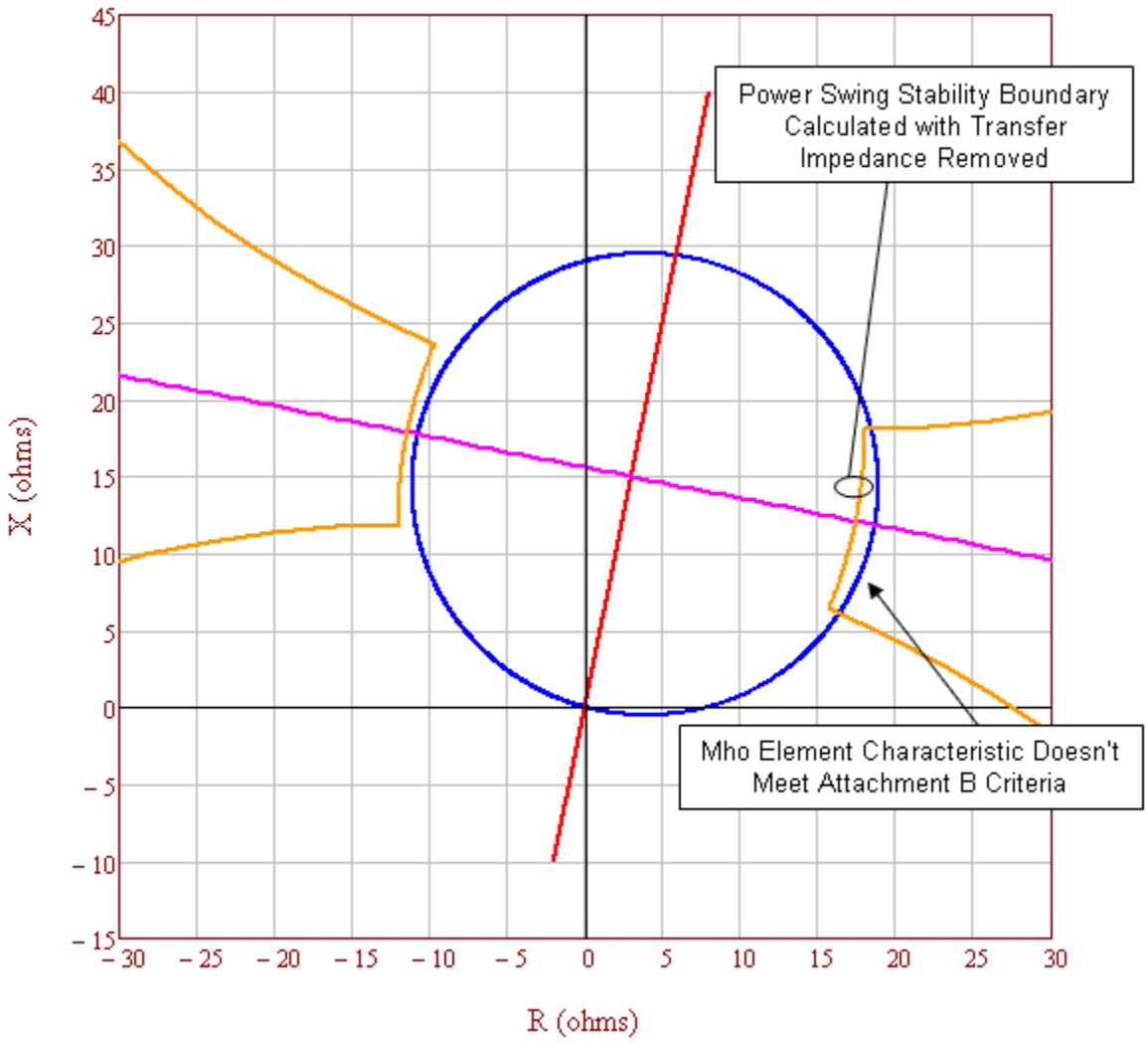

Figure 10: This is an example of an unstable power swing region (i.e., the orange characteristic) with the parallel transfer impedance removed. This relay mho element characteristic (i.e., the blue circle) does not meet PRC-026-2 – Attachment B, Criterion A because it is not completely contained within the unstable power swing region.

Table 8: Example Calculation (Parallel Transfer Impedance Removed)	
Calculations for the point at 120 degrees with equal source impedances. The total system current equals the line current. See Figure 10.	
Eq. (54)	$E_S = \frac{V_{LL}\angle 120°}{\sqrt{3}}$
	$E_S = \frac{230{,}000\angle 120°\ V}{\sqrt{3}}$
	$E_S = 132{,}791\angle 120°\ V$

Table 8: Example Calculation (Parallel Transfer Impedance Removed)			
Eq. (55)	$E_R = \frac{V_{LL}\angle 0°}{\sqrt{3}}$		
	$E_R = \frac{230{,}000\angle 0°\ V}{\sqrt{3}}$		
	$E_R = 132{,}791\angle 0°\ V$		
Given impedance data.			
Given:	$Z_S = 2 + j10\ \Omega$	$Z_L = 4 + j20\ \Omega$	$Z_R = 4 + j20\ \Omega$
Given:	$Z_{TR} = Z_L \times 10^{10}\ \Omega$		
Total impedance between the generators.			
Eq. (56)	$Z_{total} = \frac{(Z_L \times Z_{TR})}{(Z_L + Z_{TR})}$		
	$Z_{total} = \frac{\left((4 + j20)\ \Omega \times (4 + j20) \times 10^{10}\ \Omega\right)}{\left((4 + j20)\ \Omega + (4 + j20) \times 10^{10}\ \Omega\right)}$		
	$Z_{total} = 4 + j20\ \Omega$		
Total system impedance.			
Eq. (57)	$Z_{sys} = Z_S + Z_{total} + Z_R$		
	$Z_{sys} = (2 + j10)\ \Omega + (4 + j20)\ \Omega + (4 + j20)\ \Omega$		
	$Z_{sys} = 10 + j50\ \Omega$		
Total system current from sending-end source.			
Eq. (58)	$I_{sys} = \frac{E_S - E_R}{Z_{sys}}$		
	$I_{sys} = \frac{132{,}791\angle 120°\ V - 132{,}791\angle 0°\ V}{10 + j50\ \Omega}$		
	$I_{sys} = 4{,}511\angle 71.3°\ A$		
The current, as measured by the relay on Z_L (Figure 3), is only the current flowing through that line as determined by using the current divider equation.			
Eq. (59)	$I_L = I_{sys} \times \frac{Z_{TR}}{Z_L + Z_{TR}}$		
	$I_L = 4{,}511\angle 71.3°\ A \times \frac{(4 + j20) \times 10^{10}\ \Omega}{(4 + j20)\ \Omega + (4 + j20) \times 10^{10}\ \Omega}$		
	$I_L = 4{,}511\angle 71.3°\ A$		

Table 8: Example Calculation (Parallel Transfer Impedance Removed)	
The voltage, as measured by the relay on Z_L (Figure 3), is the voltage drop from the sending-end source through the sending-end source impedance.	
Eq. (60)	$V_S = E_S - (Z_S \times I_{sys})$
	$V_S = 132{,}791\angle 120°\ V - [(2 + j10\ \Omega) \times 4{,}511\angle 71.3°\ A]$
	$V_S = 95{,}757\angle 106.1°\ V$
The impedance seen by the relay on Z_L.	
Eq. (61)	$Z_{L-Relay} = \frac{V_S}{I_L}$
	$Z_{L-Relay} = \frac{95{,}757\angle 106.1°\ V}{4{,}511\angle 71.3°\ A}$
	$Z_{L-Relay} = 17.434 + j12.113\ \Omega$

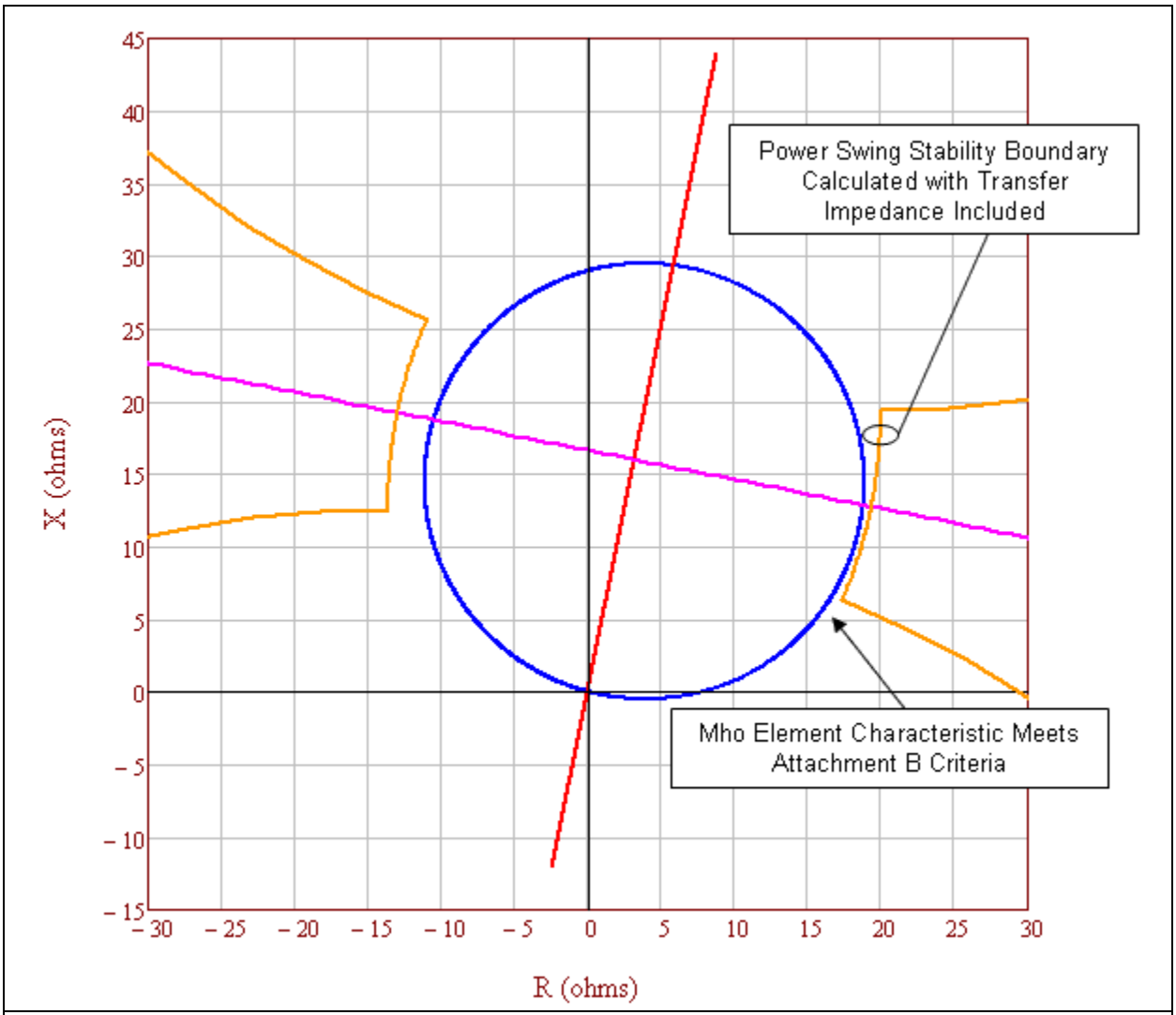

Figure 11: This is an example of an unstable power swing region (i.e., the orange characteristic) with the parallel transfer impedance included causing the mho element characteristic (i.e., the blue circle) to appear to meet the PRC-026-2 – Attachment B, Criterion A because it is completely contained within the unstable power swing region. Including the parallel transfer impedance in the calculation is not allowed by the PRC-026-2 – Attachment B, Criterion A.

In Figure 11 above, the parallel transfer impedance is 5 times the line impedance. The unstable power swing region has expanded out beyond the mho element characteristic due to the infeed effect from the parallel current through the parallel transfer impedance, thus allowing the mho element characteristic to appear to meet the PRC-026-2 – Attachment B, Criterion A. Including the parallel transfer impedance in the calculation is not allowed by the PRC-026-2 – Attachment B, Criterion A.

Table 9: Example Calculation (Parallel Transfer Impedance Included)			
Calculations for the point at 120 degrees with equal source impedances. The total system current does not equal the line current. See Figure 11.			
Eq. (62)	$E_S = \frac{V_{LL}\angle 120°}{\sqrt{3}}$		
	$E_S = \frac{230{,}000\angle 120°\ V}{\sqrt{3}}$		
	$E_S = 132{,}791\angle 120°\ V$		
Eq. (63)	$E_R = \frac{V_{LL}\angle 0°}{\sqrt{3}}$		
	$E_R = \frac{230{,}000\angle 0°\ V}{\sqrt{3}}$		
	$E_R = 132{,}791\angle 0°\ V$		
Given impedance data.			
Given:	$Z_S = 2 + j10\ \Omega$	$Z_L = 4 + j20\ \Omega$	$Z_R = 4 + j20\ \Omega$
Given:	$Z_{TR} = Z_L \times 5$		
	$Z_{TR} = (4 + j20)\ \Omega \times 5$		
	$Z_{TR} = 20 + j100\ \Omega$		
Total impedance between the generators.			
Eq. (64)	$Z_{total} = \frac{(Z_L \times Z_{TR})}{(Z_L + Z_{TR})}$		
	$Z_{total} = \frac{(4 + j20)\ \Omega \times (20 + j100)\ \Omega}{(4 + j20)\ \Omega + (20 + j100)\ \Omega}$		
	$Z_{total} = 3.333 + j16.667\ \Omega$		
Total system impedance.			
Eq. (65)	$Z_{sys} = Z_S + Z_{total} + Z_R$		
	$Z_{sys} = (2 + j10)\ \Omega + (3.333 + j16.667)\ \Omega + (4 + j20)\ \Omega$		
	$Z_{sys} = 9.333 + j46.667\ \Omega$		
Total system current from sending-end source.			
Eq. (66)	$I_{sys} = \frac{E_S - E_R}{Z_{sys}}$		
	$I_{sys} = \frac{132{,}791\angle 120°\ V - 132{,}791\angle 0°\ V}{9.333 + j46.667\ \Omega}$		

Table 9: Example Calculation (Parallel Transfer Impedance Included)	
	$I_{sys} = 4{,}833\angle 71.3°\ A$
The current, as measured by the relay on Z_L (Figure 3), is only the current flowing through that line as determined by using the current divider equation.	
Eq. (67)	$I_L = I_{sys} \times \frac{Z_{TR}}{Z_L + Z_{TR}}$
	$I_L = 4{,}833\angle 71.3°\ A \times \frac{(20 + j100)\ \Omega}{(4 + j20)\ \Omega + (20 + j100)\ \Omega}$
	$I_L = 4{,}027.4\angle 71.3°\ A$
The voltage, as measured by the relay on Z_L (Figure 3), is the voltage drop from the sending-end source through the sending-end source impedance.	
Eq. (68)	$V_S = E_S - (Z_S \times I_{sys})$
	$V_S = 132{,}791\angle 120°\ V - [(2 + j10\ \Omega) \times 4{,}833\angle 71.3°\ A]$
	$V_S = 93{,}417\angle 104.7°\ V$
The impedance seen by the relay on Z_L.	
Eq. (69)	$Z_{L-Relay} = \frac{V_S}{I_L}$
	$Z_{L-Relay} = \frac{93{,}417\angle 104.7°\ V}{4{,}027\angle 71.3°\ A}$
	$Z_{L-Relay} = 19.366 + j12.767\ \Omega$

Table 10: Percent Increase of a Lens Due To Parallel Transfer Impedance.	
The following demonstrates the percent size increase of the lens characteristic for Z_{TR} in multiples of Z_L with the parallel transfer impedance included.	
Z_{TR} in multiples of Z_L	Percent increase of lens with equal EMF sources (Infinite source as reference)
Infinite	N/A
1000	0.05%
100	0.46%
10	4.63%
5	9.27%
2	23.26%
1	46.76%
0.5	94.14%
0.25	189.56%

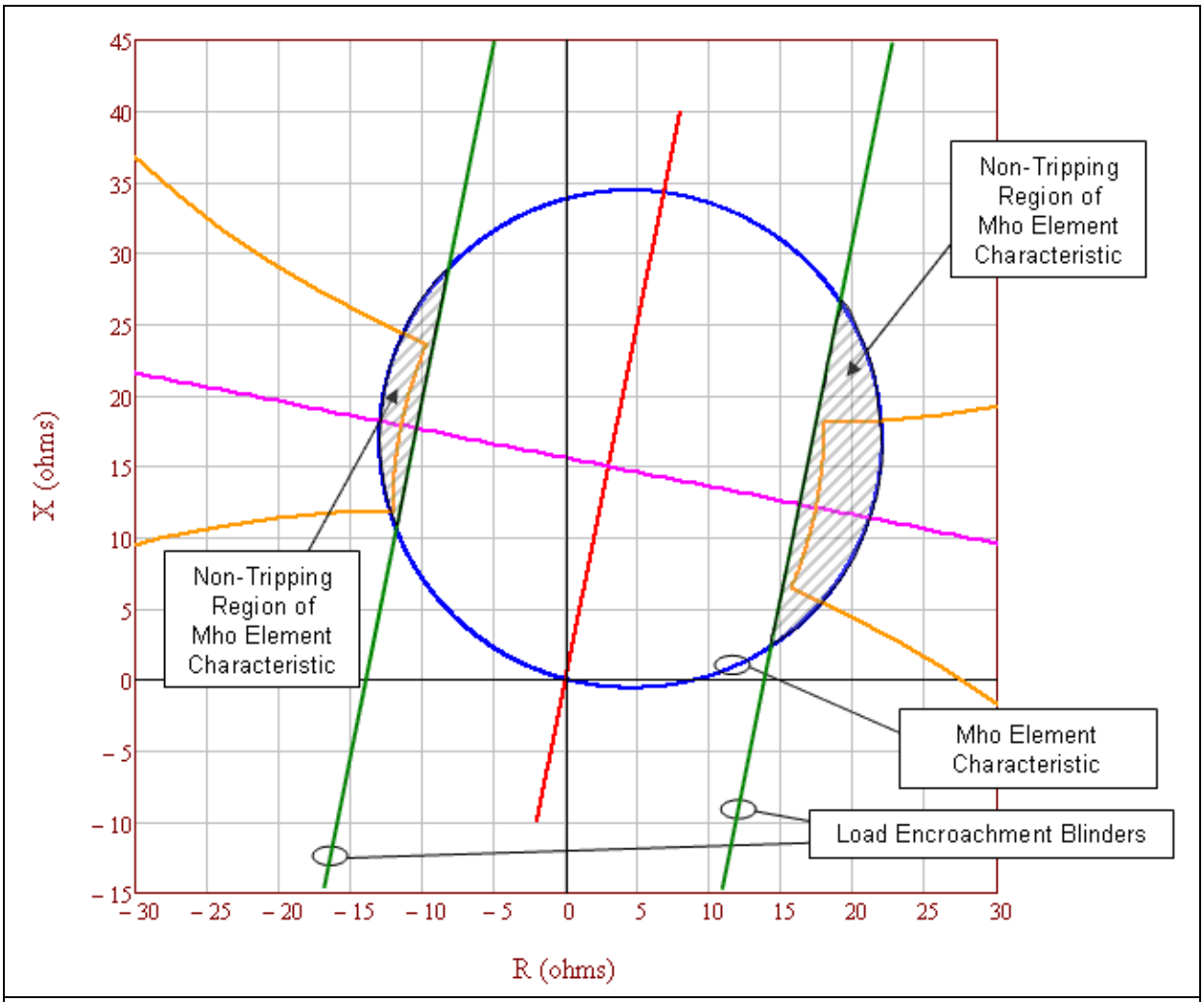

Figure 12: The tripping portion of the mho element characteristic (i.e., the blue circle) not blocked by load encroachment (i.e., the parallel green lines) is completely contained within the unstable power swing region (i.e., the orange characteristic). Therefore, the mho element characteristic meets the PRC-026-2– Attachment B, Criterion A.

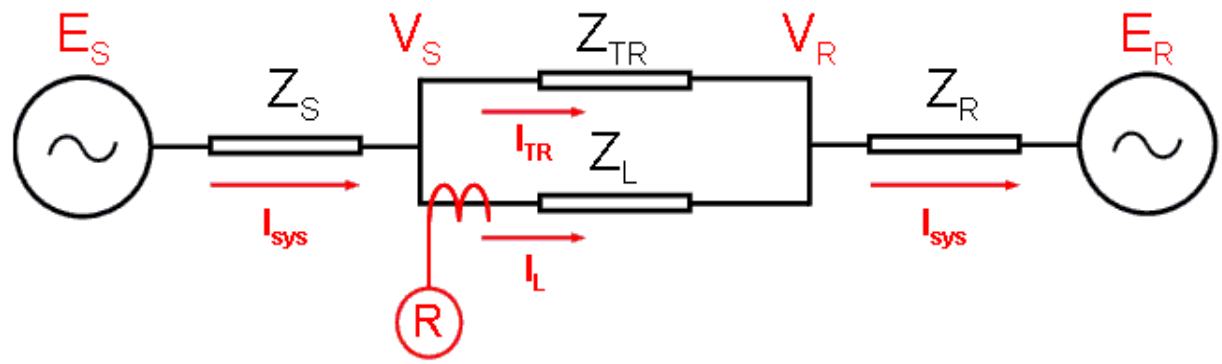

Figure 13: The infeed diagram shows the impedance in front of the relay R with the parallel transfer impedance included. As the parallel transfer impedance approaches infinity, the impedances seen by the relay R in the forward direction becomes $Z_L + Z_R$.

Table 11: Calculations (System Apparent Impedance in the forward direction)				
The following equations are provided for calculating the apparent impedance back to the E_R source voltage as seen by relay R. Infeed equations from V_S to source E_R where $E_R = 0$. See Figure 13.				
Eq. (70)	$I_L = \frac{V_S - V_R}{Z_L}$			
Eq. (71)	$I_{sys} = \frac{V_R - E_R}{Z_R}$			
Eq. (72)	$I_{sys} = I_L + I_{TR}$			
Eq. (73)	$I_{sys} = \frac{V_R}{Z_R}$	Since $E_R = 0$	Rearranged:	$V_R = I_{sys} \times Z_R$
Eq. (74)	$I_L = \frac{V_S - I_{sys} \times Z_R}{Z_L}$			
Eq. (75)	$I_L = \frac{V_S - [(I_L + I_{TR}) \times Z_R]}{Z_L}$			
Eq. (76)	$V_S = (I_L \times Z_L) + (I_L \times Z_R) + (I_{TR} \times Z_R)$			
Eq. (77)	$Z_{Relay} = \frac{V_S}{I_L} = Z_L + Z_R + \frac{I_{TR} \times Z_R}{I_L} = Z_L + Z_R \times \left(1 + \frac{I_{TR}}{I_L}\right)$			
Eq. (78)	$I_{TR} = I_{sys} \times \frac{Z_L}{Z_L + Z_{TR}}$			
Eq. (79)	$I_L = I_{sys} \times \frac{Z_{TR}}{Z_L + Z_{TR}}$			

Table 11: Calculations (System Apparent Impedance in the forward direction)	
Eq. (80)	$\frac{I_{TR}}{I_L} = \frac{Z_L}{Z_{TR}}$
The infeed equations shows the impedance in front of the relay R (Figure 13) with the parallel transfer impedance included. As the parallel transfer impedance approaches infinity, the impedances seen by the relay R in the forward direction becomes $Z_L + Z_R$.	
Eq. (81)	$Z_{Relay} = Z_L + Z_R \times \left(1 + \frac{Z_L}{Z_{TR}}\right)$

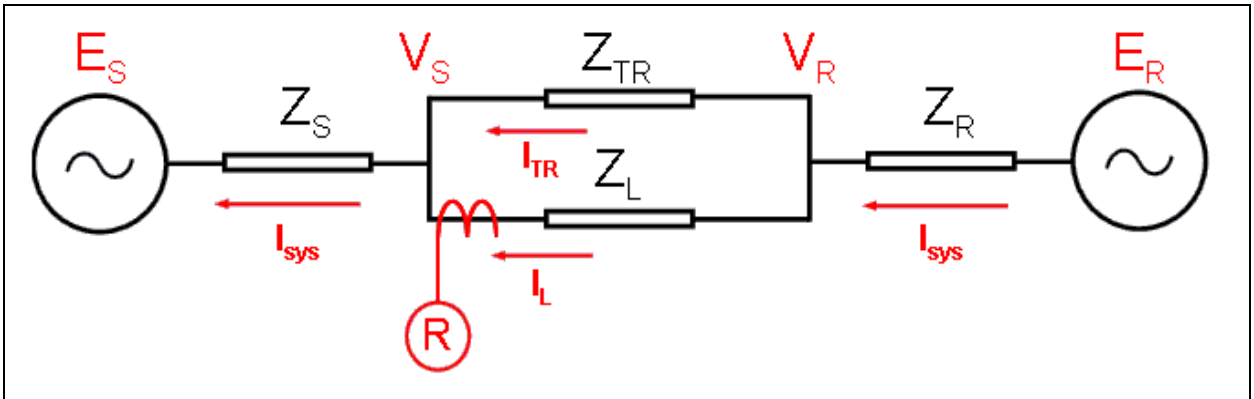

Figure 14: The infeed diagram shows the impedance behind relay R with the parallel transfer impedance included. As the parallel transfer impedance approaches infinity, the impedances seen by the relay R in the reverse direction becomes Z_S.

Table 12: Calculations (System Apparent Impedance in the Reverse Direction)				
The following equations are provided for calculating the apparent impedance back to the E_S source voltage as seen by relay R. Infeed equations from V_R back to source E_S where $E_S = 0$. See Figure 14.				
Eq. (82)	$I_L = \frac{V_R - V_S}{Z_L}$			
Eq. (83)	$I_{sys} = \frac{V_S - E_S}{Z_S}$			
Eq. (84)	$I_{sys} = I_L + I_{TR}$			
Eq. (85)	$I_{sys} = \frac{V_S}{Z_S}$	Since $E_s = 0$	Rearranged:	$V_S = I_{sys} \times Z_S$
Eq. (86)	$I_L = \frac{V_R - I_{sys} \times Z_S}{Z_L}$			

Table 12: Calculations (System Apparent Impedance in the Reverse Direction)		
Eq. (87)	$I_L = \frac{V_R - [(I_L + I_{TR}) \times Z_S]}{Z_L}$	
Eq. (88)	$V_R = (I_L \times Z_L) + (I_L \times Z_S) + (I_{TR} \times Z_{RS})$	
Eq. (89)	$Z_{Relay} = \frac{V_R}{I_L} = Z_L + Z_S + \frac{I_{TR} \times Z_S}{I_L} = Z_L + Z_S \times \left(1 + \frac{I_{TR}}{I_L}\right)$	
Eq. (90)	$I_{TR} = I_{sys} \times \frac{Z_L}{Z_L + Z_{TR}}$	
Eq. (91)	$I_L = I_{sys} \times \frac{Z_{TR}}{Z_L + Z_{TR}}$	
Eq. (92)	$\frac{I_{TR}}{I_L} = \frac{Z_L}{Z_{TR}}$	
The infeed equations shows the impedance behind relay R (Figure 14) with the parallel transfer impedance included. As the parallel transfer impedance approaches infinity, the impedances seen by the relay R in the reverse direction becomes Z_S.		
Eq. (93)	$Z_{Relay} = Z_L + Z_S \times \left(1 + \frac{Z_L}{Z_{TR}}\right)$	As seen by relay R at the receiving-end of the line.
Eq. (94)	$Z_{Relay} = Z_S \times \left(1 + \frac{Z_L}{Z_{TR}}\right)$	Subtract Z_L for relay R impedance as seen at sending-end of the line.

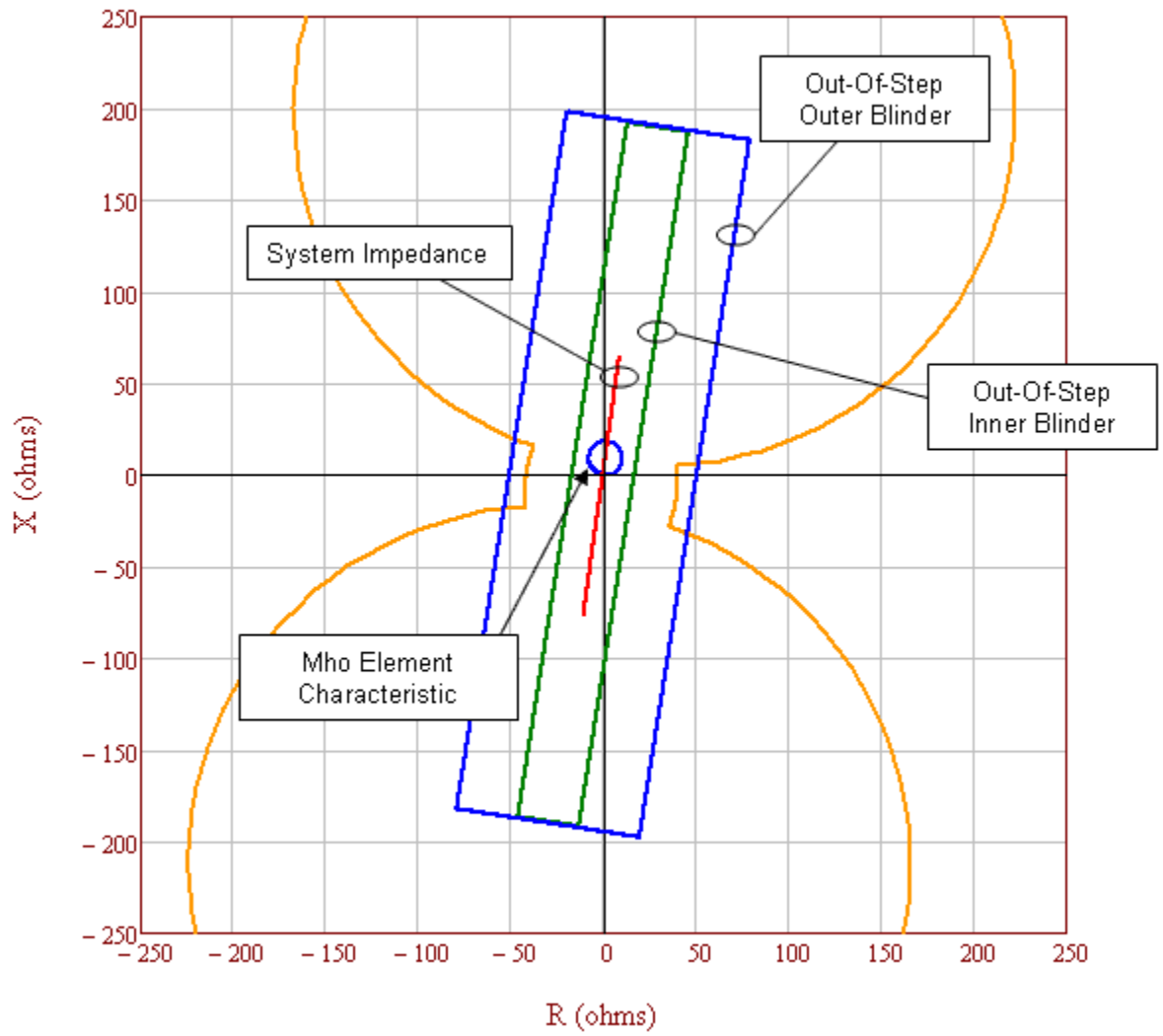

Figure 15: Out-of-step trip (OST) inner blinder (i.e., the parallel green lines) meets the PRC-026-2 – Attachment B, Criterion A because the inner OST blinder initiates tripping either On-The-Way-In or On-The-Way-Out. Since the inner blinder is completely contained within the unstable power swing region (i.e., the orange characteristic), it meets the PRC-026-2 – Attachment B, Criterion A.

Table 13: Example Calculation (Voltage Ratios)			
These calculations are based on the loss-of-synchronism characteristics for the cases of N < 1 and N > 1 as found in the *Application of Out-of-Step Blocking and Tripping Relays*, GER-3180, p. 12, Figure 3.[17] The GE illustration shows the formulae used to calculate the radius and center of the circles that make up the ends of the portion of the lens.			
Voltage ratio equations, source impedance equation with infeed formulae applied, and circle equations.			
Given:	$E_S = 0.7$	$E_R = 1.0$	
Eq. (95)	$N = \frac{\lvert E_S \rvert}{\lvert E_R \rvert} = \frac{0.7}{1.0} = 0.7$		
The total system impedance as seen by the relay with infeed formulae applied.			
Given:	$Z_S = 2 + j10\ \Omega$	$Z_L = 4 + j20\ \Omega$	$Z_R = 4 + j20\ \Omega$
Given:	$Z_{TR} = Z_L \times 10^{10}\ \Omega$		
	$Z_{TR} = (4 + j20) \times 10^{10}\ \Omega$		
Eq. (96)	$Z_{sys} = Z_S \times \left(1 + \frac{Z_L}{Z_{TR}}\right) + \left[Z_L + Z_R \times \left(1 + \frac{Z_L}{Z_{TR}}\right)\right]$		
	$Z_{sys} = 10 + j50\ \Omega$		
The calculated coordinates of the lower loss-of-synchronism circle center.			
Eq. (97)	$Z_{C1} = -\left[Z_S \times \left(1 + \frac{Z_L}{Z_{TR}}\right)\right] - \left[\frac{N^2 \times Z_{sys}}{1 - N^2}\right]$		
	$Z_{C1} = -\left[(2 + j10)\ \Omega \times \left(1 + \frac{(4 + j20)\ \Omega}{(4 + j20) \times 10^{10}\ \Omega}\right)\right] - \left[\frac{0.7^2 \times (10 + j50)\ \Omega}{1 - 0.7^2}\right]$		
	$Z_{C1} = -11.608 - j58.039\ \Omega$		
The calculated radius of the lower loss-of-synchronism circle.			
Eq. (98)	$r_a = \left\lvert \frac{N \times Z_{sys}}{1 - N^2} \right\rvert$		
	$r_a = \left\lvert \frac{0.7 \times (10 + j50)\ \Omega}{1 - 0.7^2} \right\rvert$		
	$r_a = 69.987\ \Omega$		
The calculated coordinates of the upper loss-of-synchronism circle center.			
Given:	$E_S = 1.0$	$E_R = 0.7$	

[17] http://store.gedigitalenergy.com/faq/Documents/Alps/GER-3180.pdf

Table 13: Example Calculation (Voltage Ratios)	
Eq. (99)	$N = \frac{\lvert E_S \rvert}{\lvert E_R \rvert} = \frac{1.0}{0.7} = 1.43$
Eq. (100)	$Z_{C2} = Z_L + \left[Z_R \times \left(1 + \frac{Z_L}{Z_{TR}}\right)\right] + \left[\frac{Z_{sys}}{N^2 - 1}\right]$
	$Z_{C2} = 4 + j20\ \Omega + \left[(4 + j20)\ \Omega \times \left(1 + \frac{(4 + j20)\ \Omega}{(4 + j20) \times 10^{10}\ \Omega}\right)\right] + \left[\frac{(10 + j50)\ \Omega}{1.43^2 - 1}\right]$
	$Z_{C2} = 17.608 + j88.039\ \Omega$
The calculated radius of the upper loss-of-synchronism circle.	
Eq. (101)	$r_b = \left\lvert \frac{N \times Z_{sys}}{N^2 - 1} \right\rvert$
	$r_b = \left\lvert \frac{1.43 \times (10 + j50)\ \Omega}{1.43^2 - 1} \right\rvert$
	$r_b = 69.987\ \Omega$

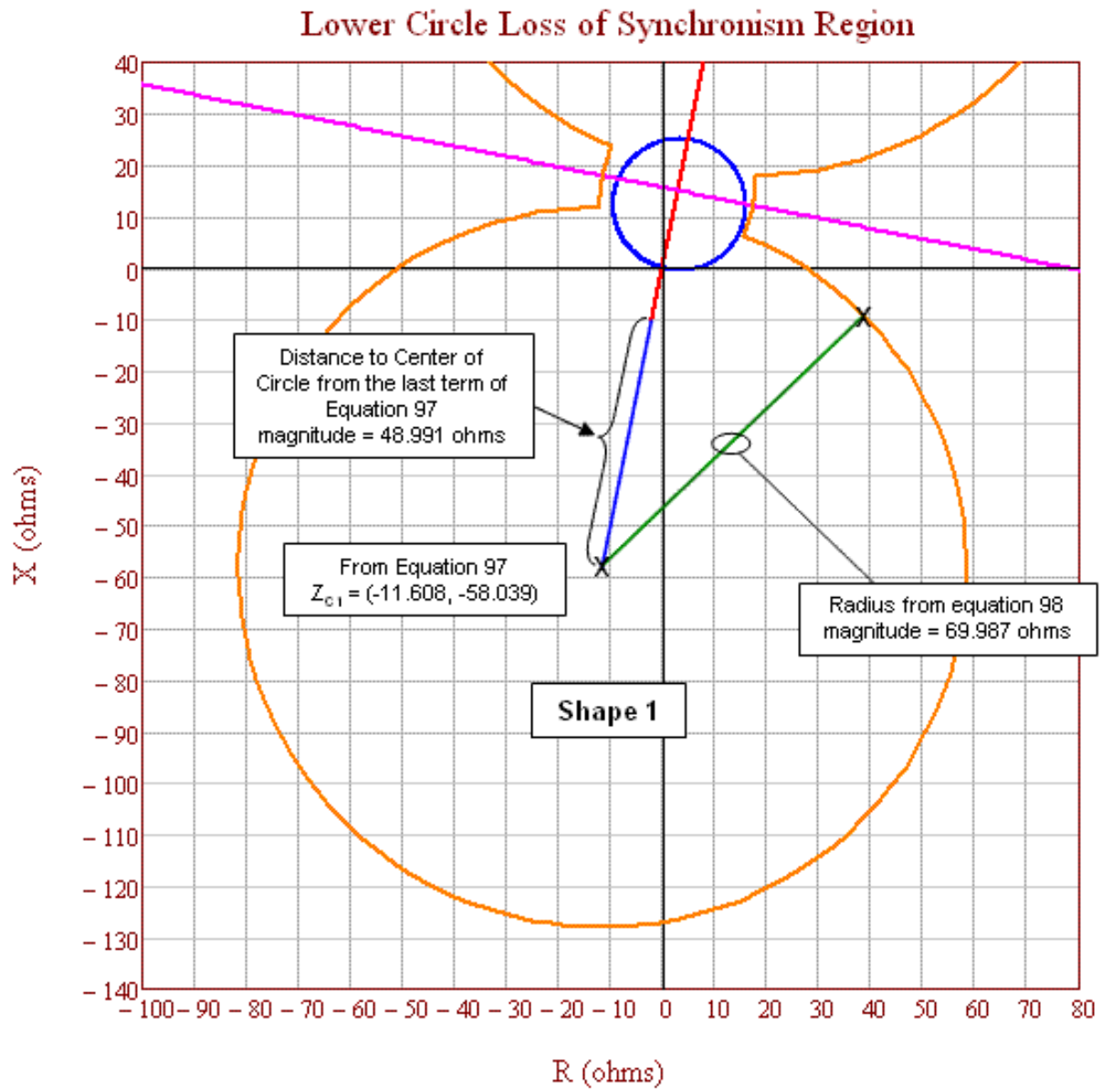

Figure 15a: Lower circle loss-of-synchronism region showing the coordinates of the circle center and the circle radius.

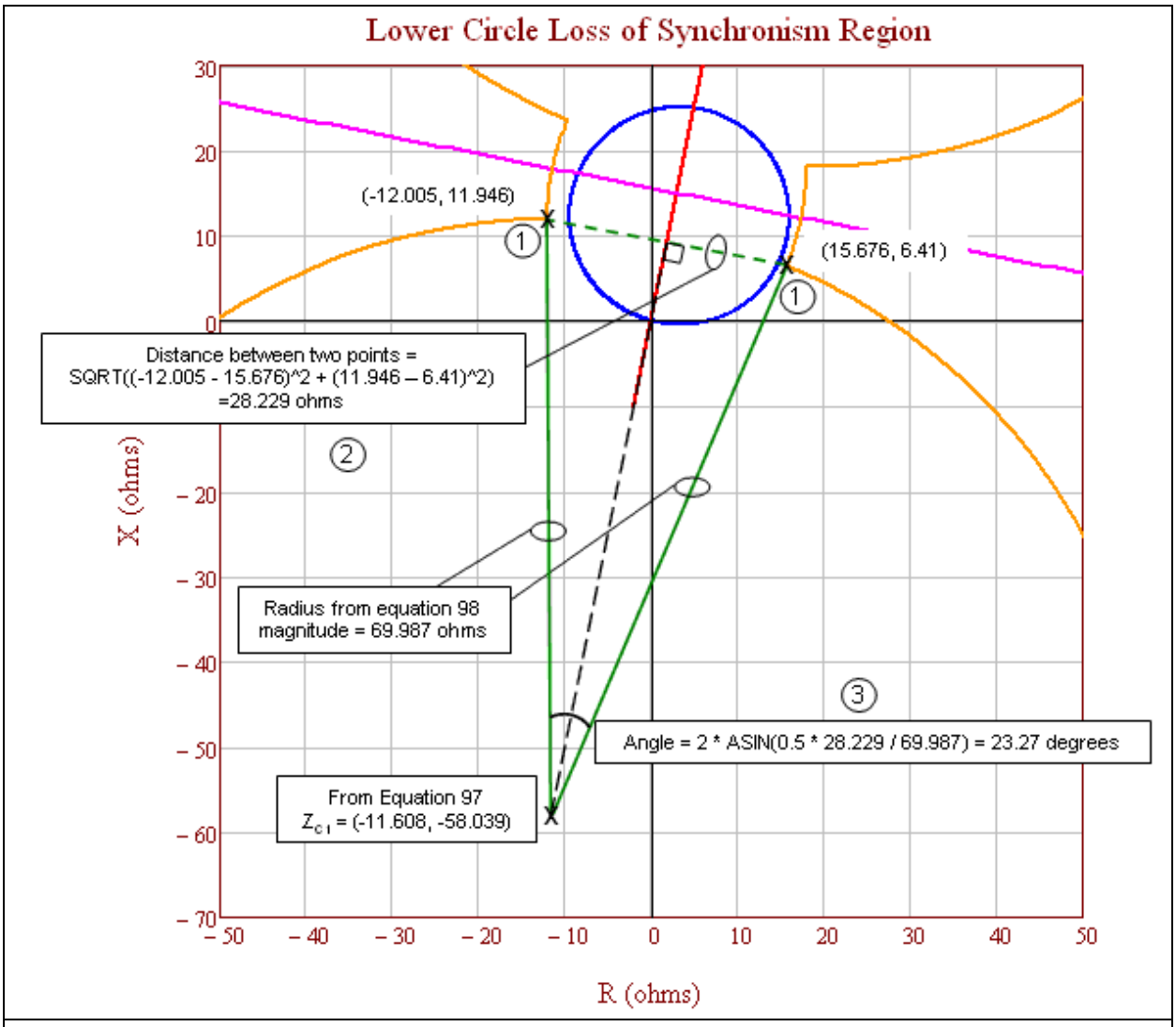

Figure 15b: Lower circle loss-of-synchronism region showing the first three steps to calculate the coordinates of the points on the circle. 1) Identify the lower circle loss-of-synchronism points that intersect the lens shape where the sending-end to receiving-end voltage ratio is 0.7 (see lens shape calculations in Tables 2-7). 2) Calculate the distance between the two lower circle loss-of-synchronism points identified in Step 1. 3) Calculate the angle of arc that connects the two lower circle loss-of-synchronism points identified in Step 1.

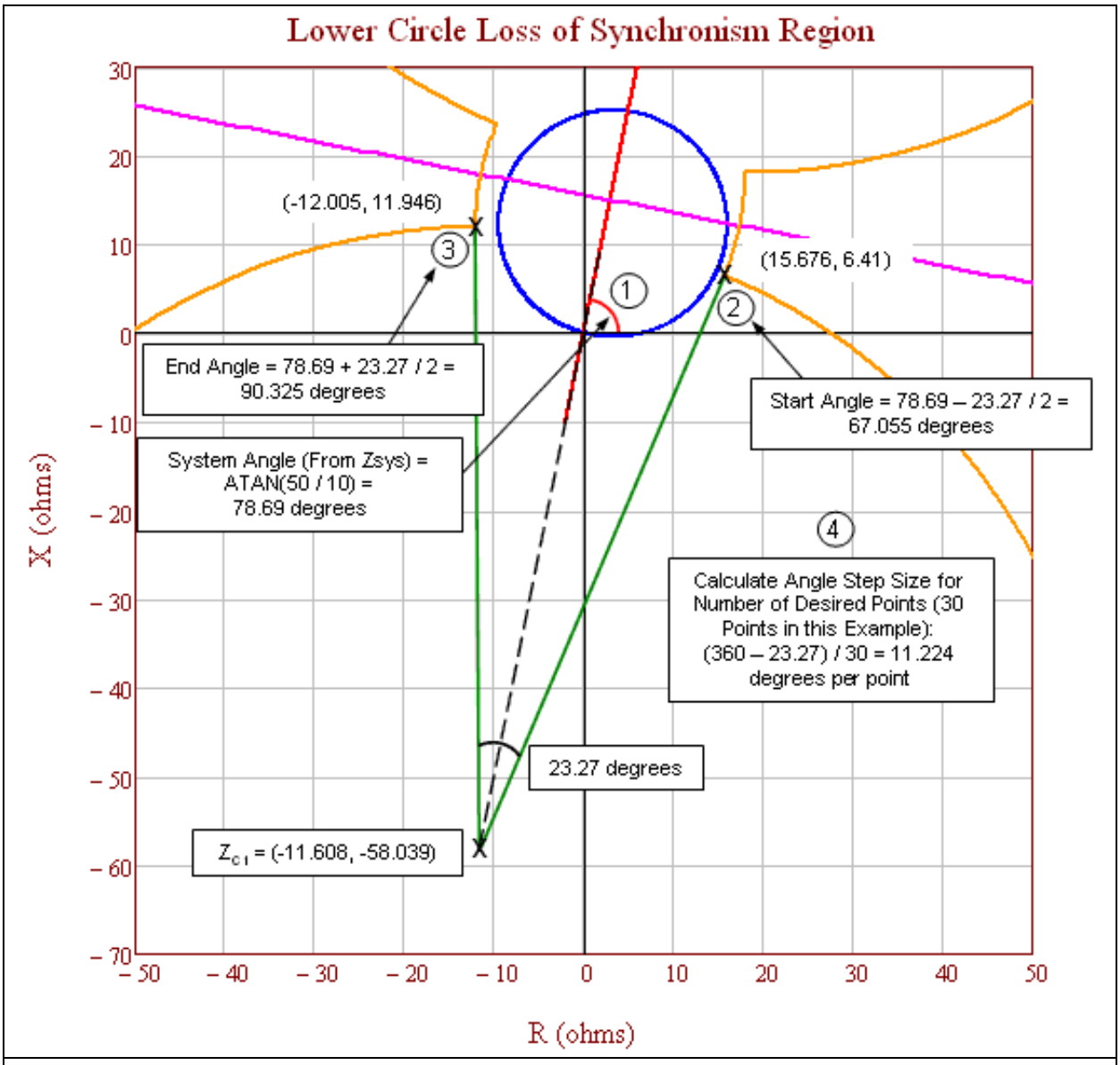

Figure 15c: Lower circle loss-of-synchronism region showing the steps to calculate the start angle, end angle, and the angle step size for the desired number of calculated points. 1) Calculate the system angle. 2) Calculate the start angle. 3) Calculate the end angle. 4) Calculate the angle step size for the desired number of points.

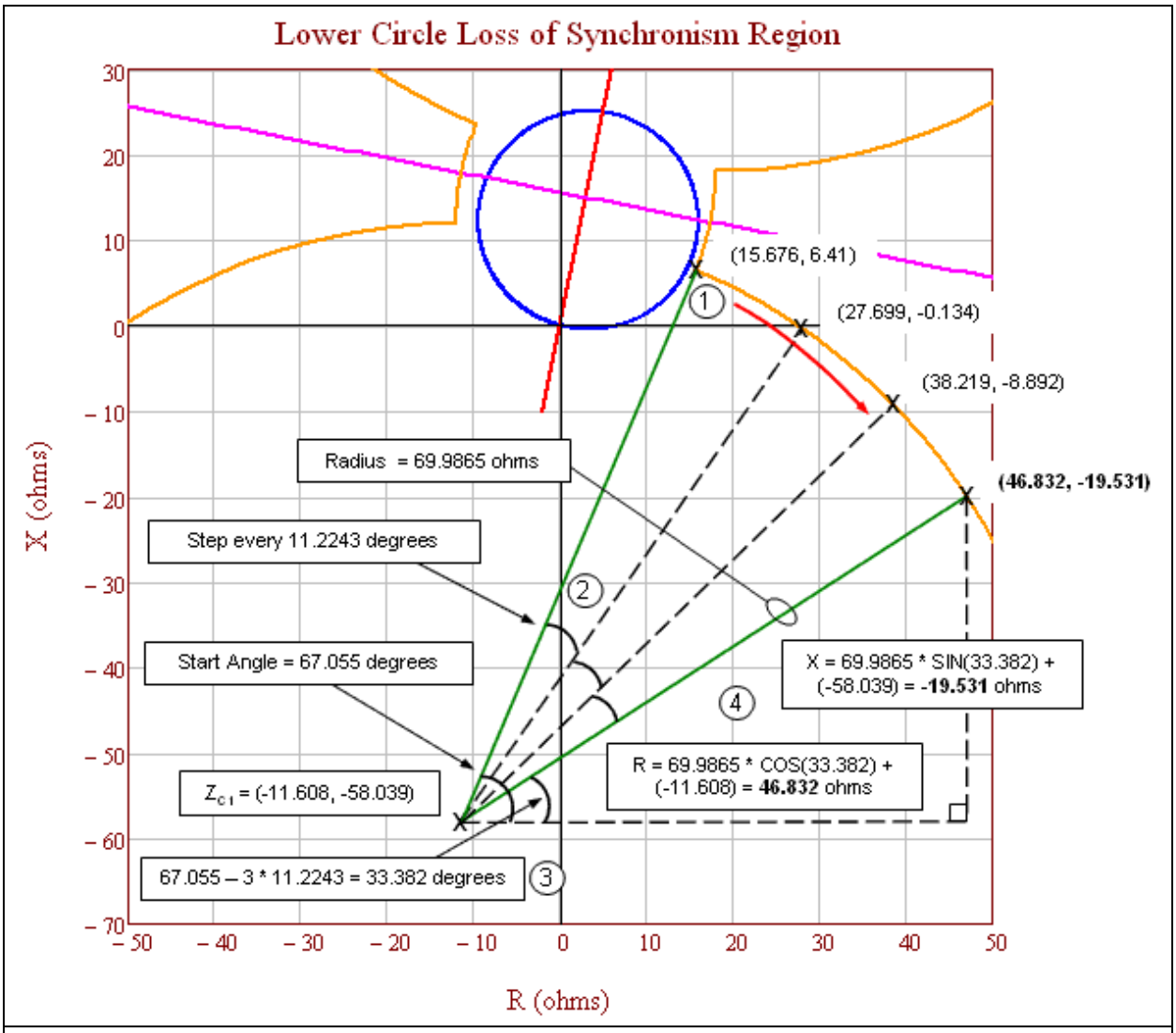

Figure 15d: Lower circle loss-of-synchronism region showing the final steps to calculate the coordinates of the points on the circle. 1) Start at the intersection with the lens shape and proceed in a clockwise direction. 2) Advance the step angle for each point. 3) Calculate the new angle after step advancement. 4) Calculate the R–X coordinates.

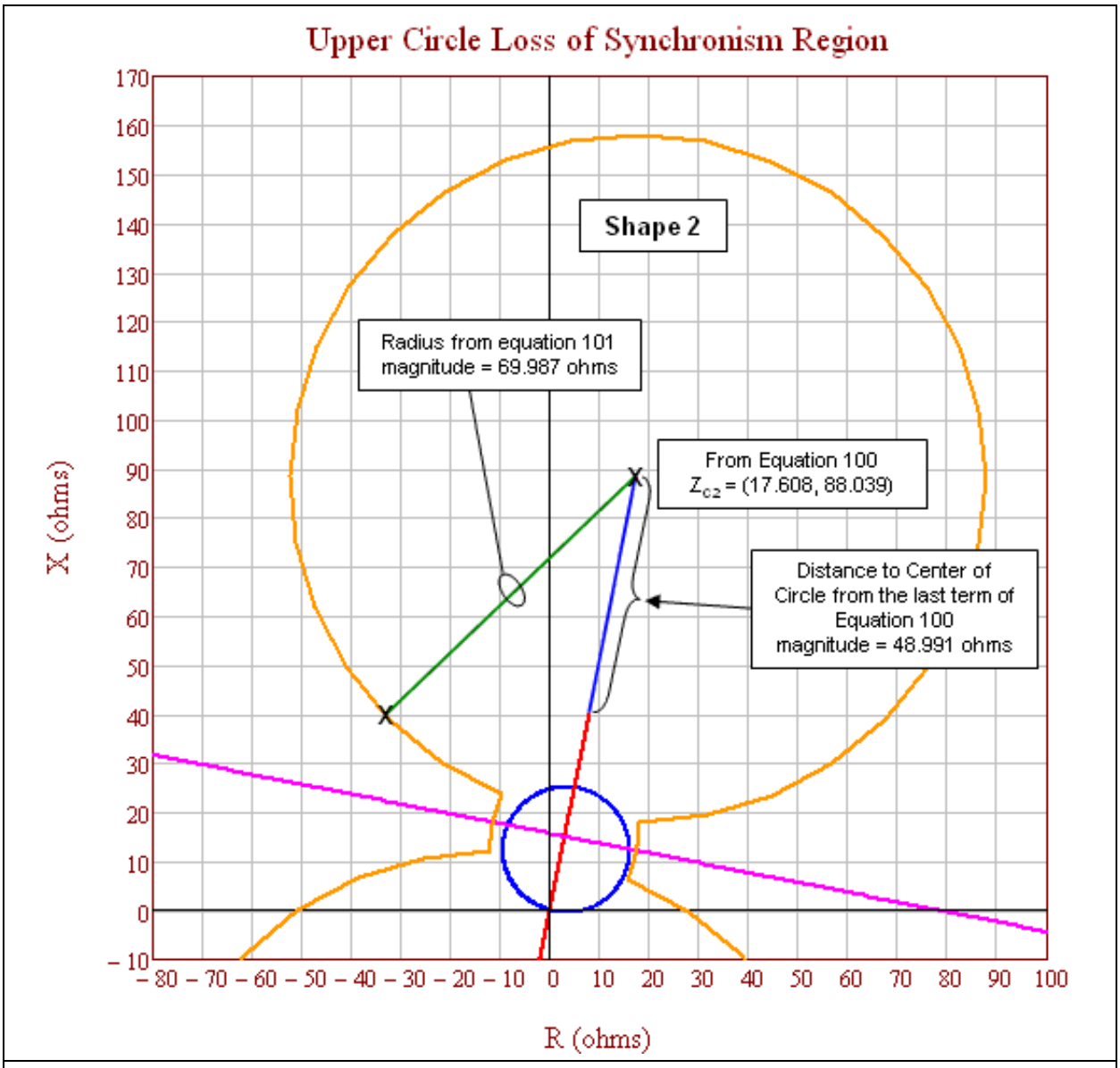

Figure 15e: Upper circle loss-of-synchronism region showing the coordinates of the circle center and the circle radius.

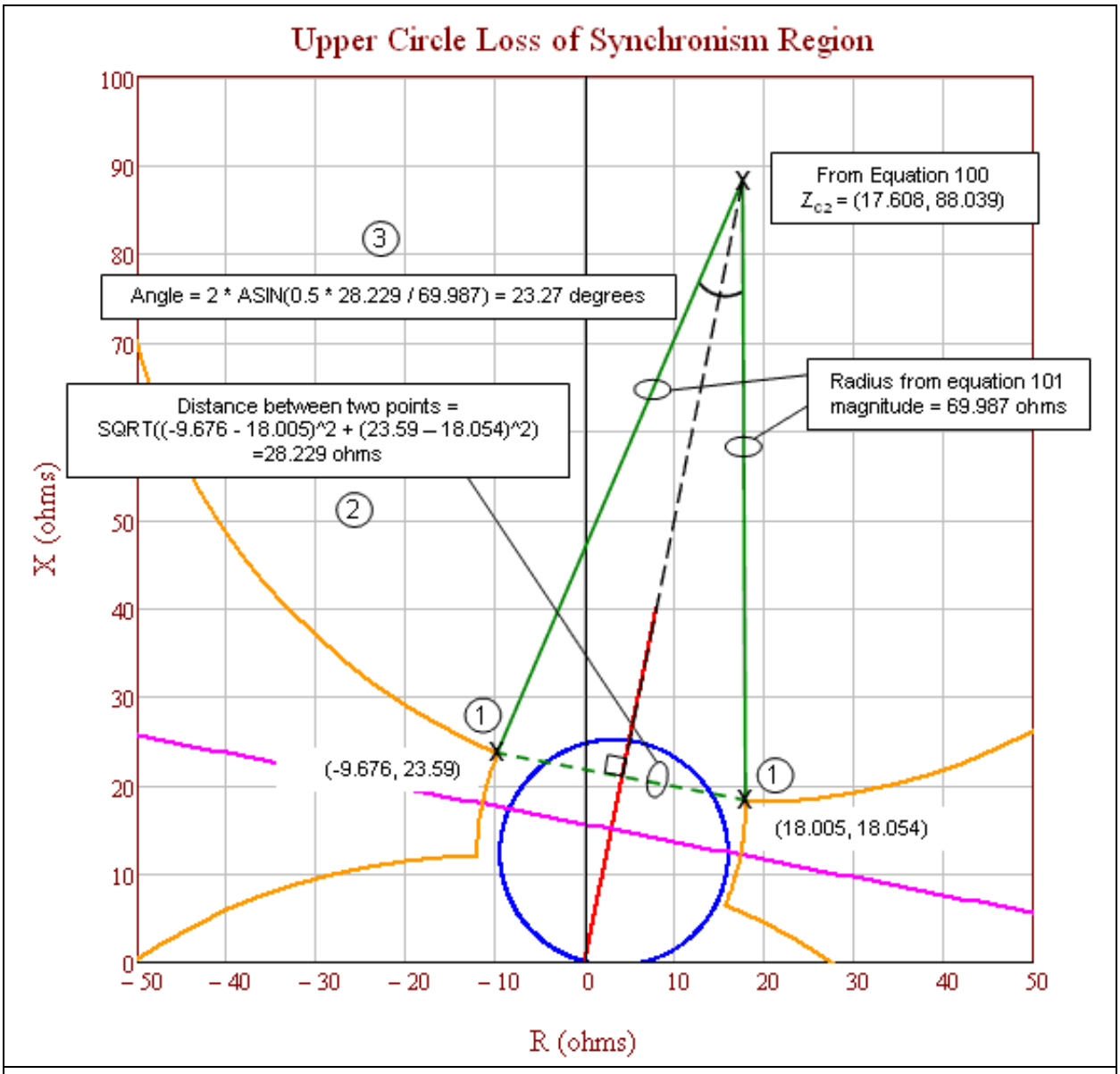

Figure 15f: Upper circle loss-of-synchronism region showing the first three steps to calculate the coordinates of the points on the circle. 1) Identify the upper circle points that intersect the lens shape where the sending-end to receiving-end voltage ratio is 1.43 (see lens shape calculations in Tables 2-7). 2) Calculate the distance between the two upper circle points identified in Step 1. 3) Calculate the angle of arc that connects the two upper circle points identified in Step 1.

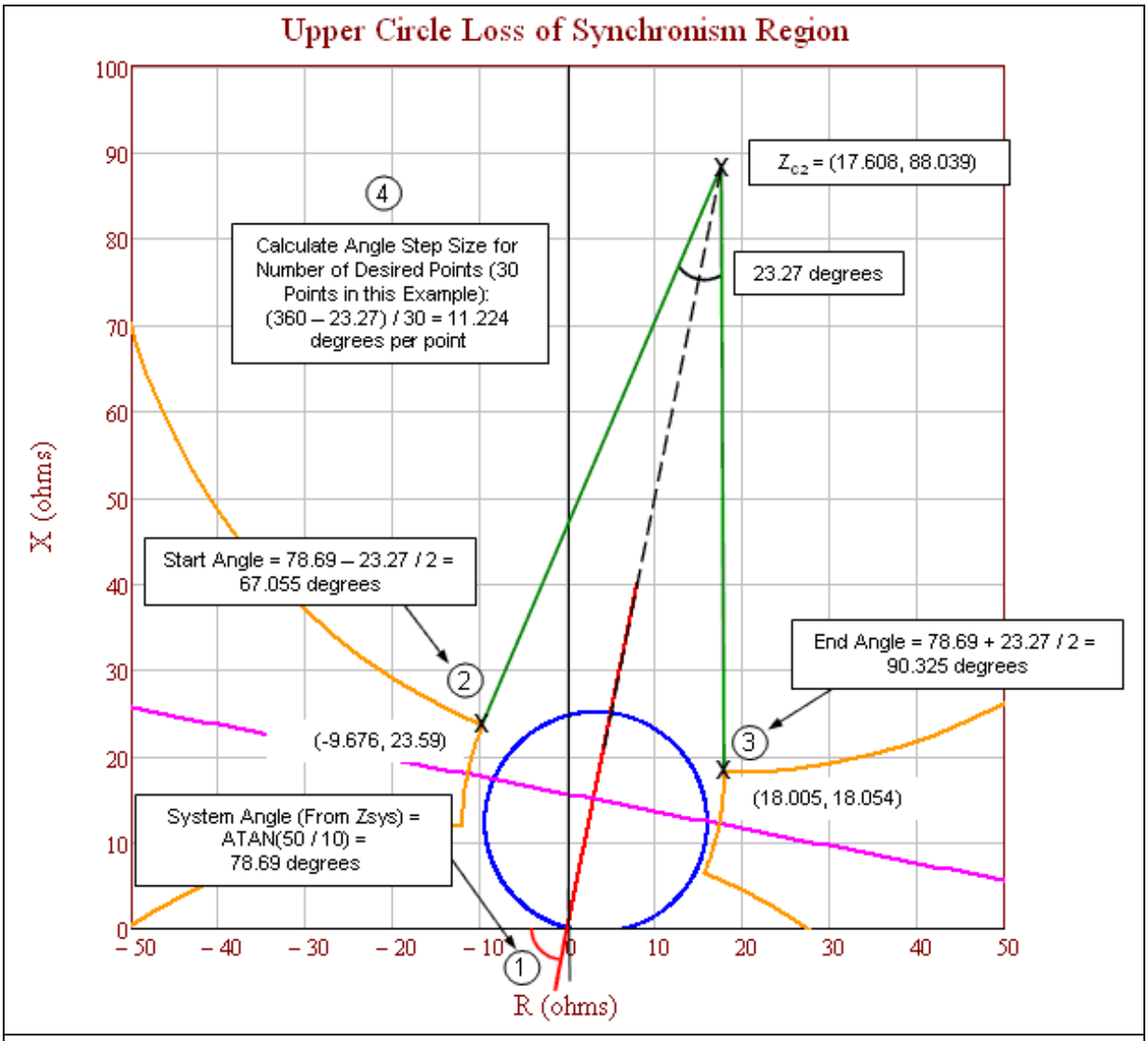

Figure 15g: Upper circle loss-of-synchronism region showing the steps to calculate the start angle, end angle, and the angle step size for the desired number of calculated points. 1) Calculate the system angle. 2) Calculate the start angle. 3) Calculate the end angle. 4) Calculate the angle step size for the desired number of points.

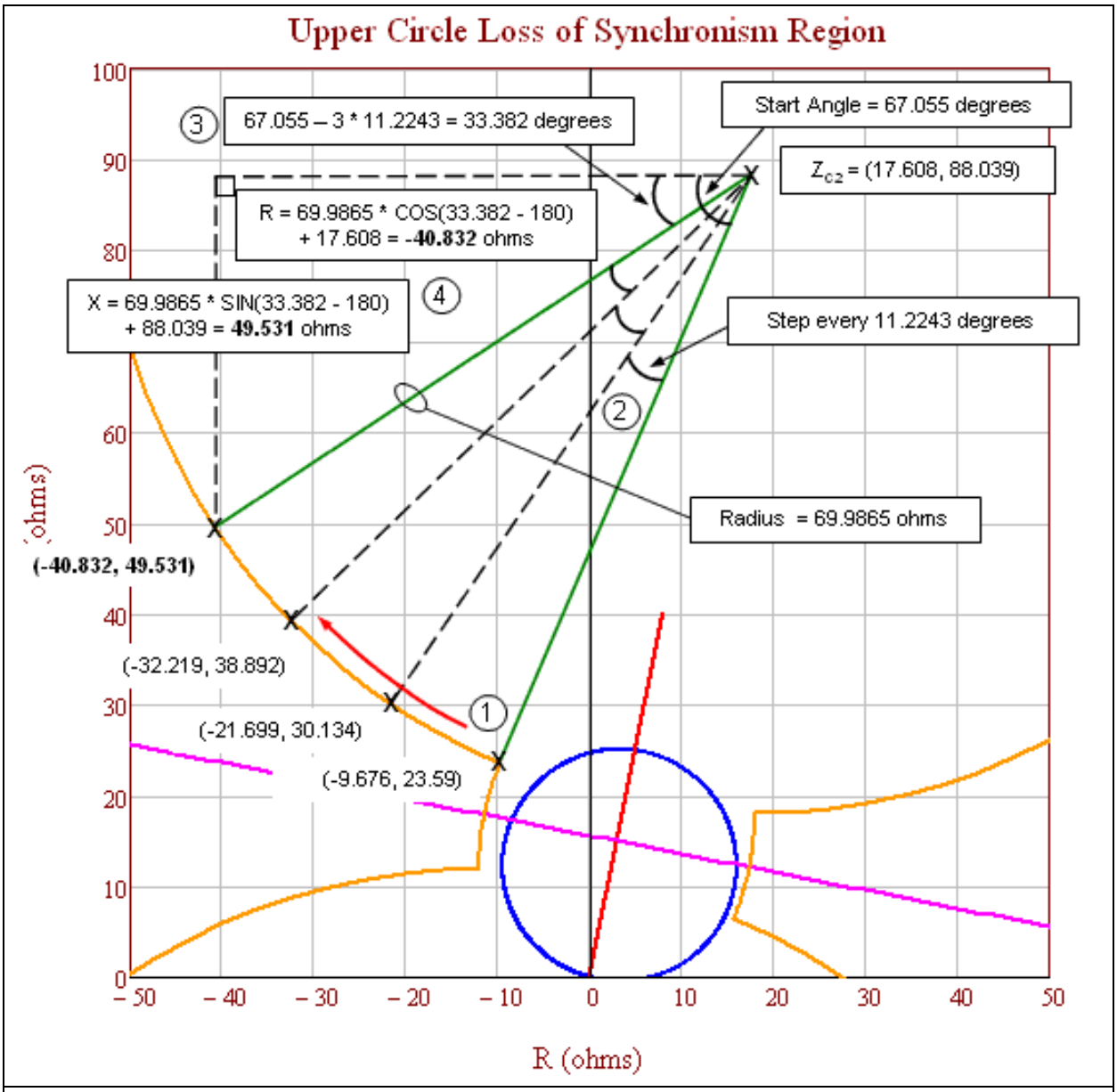

Figure 15h: Upper circle loss-of-synchronism region showing the final steps to calculate the coordinates of the points on the circle. 1) Start at the intersection with the lens shape and proceed in a clockwise direction. 2) Advance the step angle for each point. 3) Calculate the new angle after step advancement. 4) Calculate the R-X coordinates.

Lower Loss of Synchronism Circle Coordinates		
Angle (degrees)	R	+ jX
67.055	15.676	6.41
55.831	27.699	-0.134
44.606	38.219	-8.892
33.382	**46.832**	**-19.531**
22.158	53.21	-31.643
10.933	57.108	-44.765
359.709	58.378	-58.395
348.485	56.97	-72.011
337.26	52.939	-85.092
326.036	46.438	-97.139
314.812	37.717	-107.69
303.587	27.109	-116.341
292.363	15.02	-122.762
281.139	1.913	-126.707
269.914	-11.712	-128.026
258.69	-25.333	-126.667
247.466	-38.429	-122.682
236.241	-50.499	-116.225
225.017	-61.081	-107.542
213.793	-69.771	-96.965
202.568	-76.235	-84.899
191.344	-80.227	-71.806
180.12	-81.594	-58.185
168.895	-80.284	-44.56
157.671	-76.347	-31.45
146.447	-69.933	-19.357
135.222	-61.288	-8.744
123.998	-50.742	-0.016
112.774	-38.699	6.491
101.549	-25.62	10.53
90.325	-12.005	11.946

Upper Loss of Synchronism Circle Coordinates		
Angle (degrees)	R	+ jX
67.055	-9.676	23.59
55.831	-21.699	30.134
44.606	-32.219	38.892
33.382	**-40.832**	**49.531**
22.158	-47.21	61.643
10.933	-51.108	74.765
359.709	-52.378	88.395
348.485	-50.97	102.011
337.26	-46.939	115.092
326.036	-40.438	127.139
314.812	-31.717	137.69
303.587	-21.109	146.341
292.363	-9.02	152.762
281.139	4.087	156.707
269.914	17.712	158.026
258.69	31.333	156.667
247.466	44.429	152.682
236.241	56.499	146.225
225.017	67.081	137.542
213.793	75.771	126.965
202.568	82.235	114.899
191.344	86.227	101.806
180.12	87.594	88.185
168.895	86.284	74.56
157.671	82.347	61.45
146.447	75.933	49.357
135.222	67.288	38.744
123.998	56.742	30.016
112.774	44.699	23.509
101.549	31.62	19.47
90.325	18.005	18.054

Figure 15i: Full tables of calculated lower and upper loss-of-synchronism circle coordinates. The highlighted row is the detailed calculated points in Figures 15d and 15h.

Application Specific to Criterion B

The PRC-026-2– Attachment B, Criterion B evaluates overcurrent elements used for tripping. The same criteria as PRC-026-2 – Attachment B, Criterion A is used except for an additional criterion (No. 4) that calculates a current magnitude based upon generator internal voltage of 1.05 per unit. A value of 1.05 per unit generator voltage is used to establish a minimum pickup current value for overcurrent relays that have a time delay less than 15 cycles. The sending-end and receiving-end voltages are established at 1.05 per unit at 120 degree system separation angle. The 1.05 per unit is the typical upper end of the operating voltage, which is also consistent with the maximum power

transfer calculation using actual system source impedances in the PRC-023 NERC Reliability Standard. The formulas used to calculate the current are in Table 14 below.

Table 14: Example Calculation (Overcurrent)			
This example is for a 230 kV line terminal with a directional instantaneous phase overcurrent element set to 50 amps secondary times a CT ratio of 160:1 that equals 8,000 amps, primary. The following calculation is where V_S equals the base line-to-ground sending-end generator source voltage times 1.05 at an angle of 120 degrees, V_R equals the base line-to-ground receiving-end generator internal voltage times 1.05 at an angle of 0 degrees, and Z_{sys} equals the sum of the sending-end source, line, and receiving-end source impedances in ohms. Here, the instantaneous phase setting of 8,000 amps is greater than the calculated system current of 5,716 amps; therefore, it meets PRC-026-2 – Attachment B, Criterion B.			
Eq. (102)	$V_S = \frac{V_{LL}\angle 120°}{\sqrt{3}} \times 1.05$		
	$V_S = \frac{230{,}000\angle 120°\ V}{\sqrt{3}} \times 1.05$		
	$V_S = 139{,}430\angle 120°\ V$		
Receiving-end generator terminal voltage.			
Eq. (103)	$V_R = \frac{V_{LL}\angle 0°}{\sqrt{3}} \times 1.05$		
	$V_R = \frac{230{,}000\angle 0°\ V}{\sqrt{3}} \times 1.05$		
	$V_R = 139{,}430\angle 0°\ V$		
The total impedance of the system (Z_{sys}) equals the sum of the sending-end source impedance (Z_S), the impedance of the line (Z_L), and receiving-end impedance (Z_R) in ohms.			
Given:	$Z_S = 3 + j26\ \Omega$	$Z_L = 1.3 + j8.7\ \Omega$	$Z_R = 0.3 + j7.3\ \Omega$
Eq. (104)	$Z_{sys} = Z_S + Z_L + Z_R$		
	$Z_{sys} = (3 + j26)\ \Omega + (1.3 + j8.7)\ \Omega + (0.3 + j7.3)\ \Omega$		
	$Z_{sys} = 4.6 + j42\ \Omega$		
Total system current.			
Eq. (105)	$I_{sys} = \frac{(V_S - V_R)}{Z_{sys}}$		
	$I_{sys} = \frac{(139{,}430\angle 120°\ V - 139{,}430\angle 0°\ V)}{(4.6 + j42)\ \Omega}$		
	$I_{sys} = 5{,}715.82\angle 66.25°\ A$		

Application Specific to Three-Terminal Lines

If a three-terminal line is identified as an Element that is susceptible to a power swing based on Requirement R1, the load-responsive protective relays at each end of the three-terminal line must be evaluated.

As shown in Figure 15j, the source impedances at each end of the line can be obtained from the similar short circuit calculation as for the two-terminal line (assuming the parallel transfer impedances are ignored).

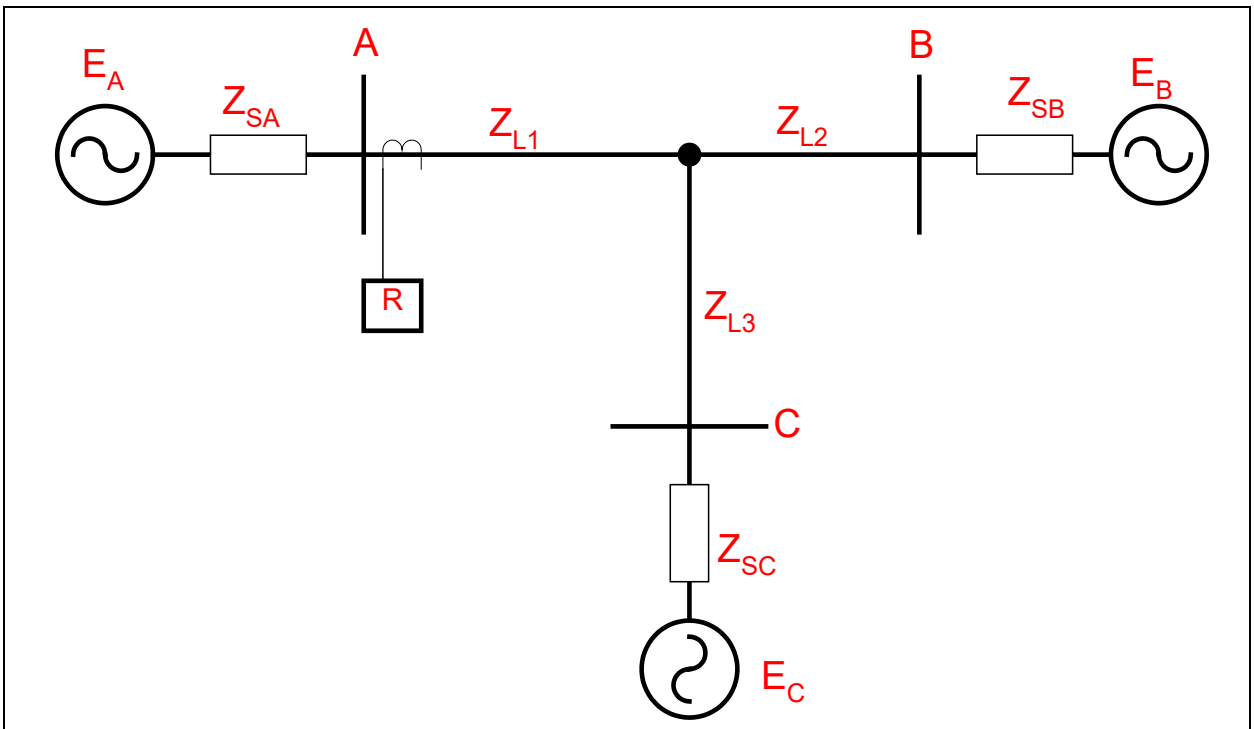

Figure 15j: Three-terminal line. To evaluate the load-responsive protective relays on the three-terminal line at Terminal A, the circuit in Figure 15j is first reduced to the equivalent circuit shown in Figure 15k. The evaluation process for the load-responsive protective relays on the line at Terminal A will now be the same as that of the two-terminal line.

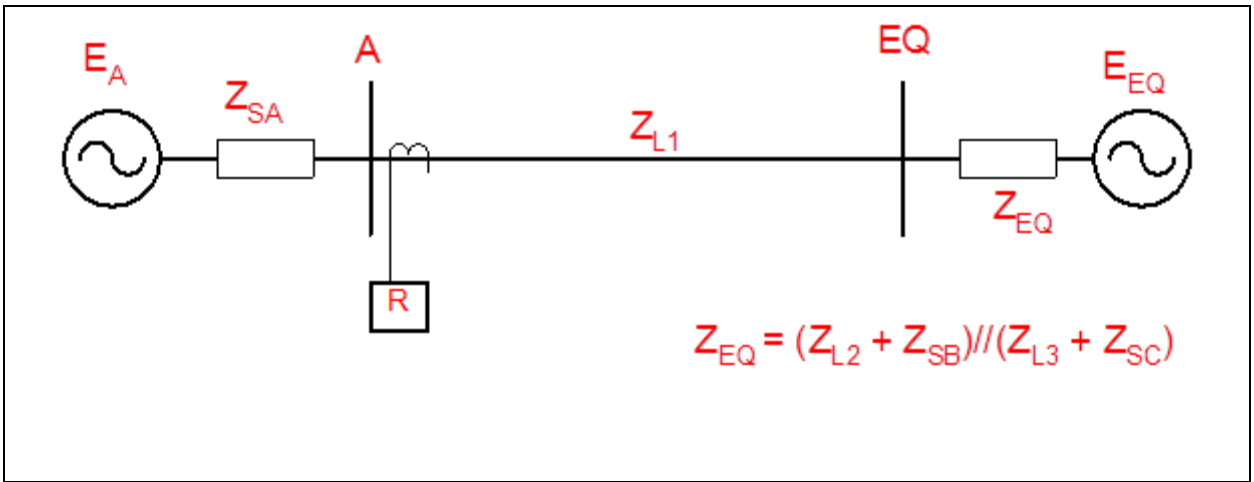

Figure 15k: Three-terminal line reduced to a two-terminal line.

Application to Generation Elements

As with transmission BES Elements, the determination of the apparent impedance seen at an Element located at, or near, a generation Facility is complex for power swings due to various interdependent quantities. These variances in quantities are caused by changes in machine internal voltage, speed governor action, voltage regulator action, the reaction of other local generators, and the reaction of other interconnected transmission BES Elements as the event progresses through the time domain. Though transient stability simulations may be used to determine the apparent impedance for verifying load-responsive relay settings,[18,19] Requirement R2, PRC-026-2 – Attachment B, Criteria A and B provides a simplified method for evaluating the load-responsive protective relay's susceptibility to tripping in response to a stable power swing without requiring stability simulations.

In general, the electrical center will be in the transmission system for cases where the generator is connected through a weak transmission system (high external impedance). In other cases where the generator is connected through a strong transmission system, the electrical center could be inside the unit connected zone.[20] In either case, load-responsive protective relays connected at the generator terminals or at the high-voltage side of the generator step-up (GSU) transformer may be challenged by power swings. Relays that may be challenged by power swings will be determined by the Planning Coordinator in Requirement R1 or by the Generator Owner after becoming aware of a generator, transformer, or transmission line BES Element that tripped[21] in response to a stable or unstable power swing due to the operation of its protective relay(s) in Requirement R2.

[18] Donald Reimert, *Protective Relaying for Power Generation Systems*, Boca Raton, FL, CRC Press, 2006.

[19] Prabha Kundur, *Power System Stability and Control*, EPRI, McGraw Hill, Inc., 1994.

[20] Ibid, Kundur.

[21] See Guidelines and Technical Basis section, "Becoming Aware of an Element That Tripped in Response to a Power Swing,"

Voltage controlled time-overcurrent and voltage-restrained time-overcurrent relays are excluded from this standard. When these relays are set based on equipment permissible overload capability, their operating times are much greater than 15 cycles for the current levels observed during a power swing.

Instantaneous overcurrent, time-overcurrent, and definite-time overcurrent relays with a time delay of less than 15 cycles for the current levels observed during a power swing are applicable and are required to be evaluated for identified Elements.

The generator loss-of-field protective function is provided by impedance relay(s) connected at the generator terminals. The settings are applied to protect the generator from a partial or complete loss of excitation under all generator loading conditions and, at the same time, be immune to tripping on stable power swings. It is more likely that the loss-of-field relay would operate during a power swing when the automatic voltage regulator (AVR) is in manual mode rather than when in automatic mode.[22] Figure 16 illustrates the loss-of-field relay in the R-X plot, which typically includes up to three zones of protection.

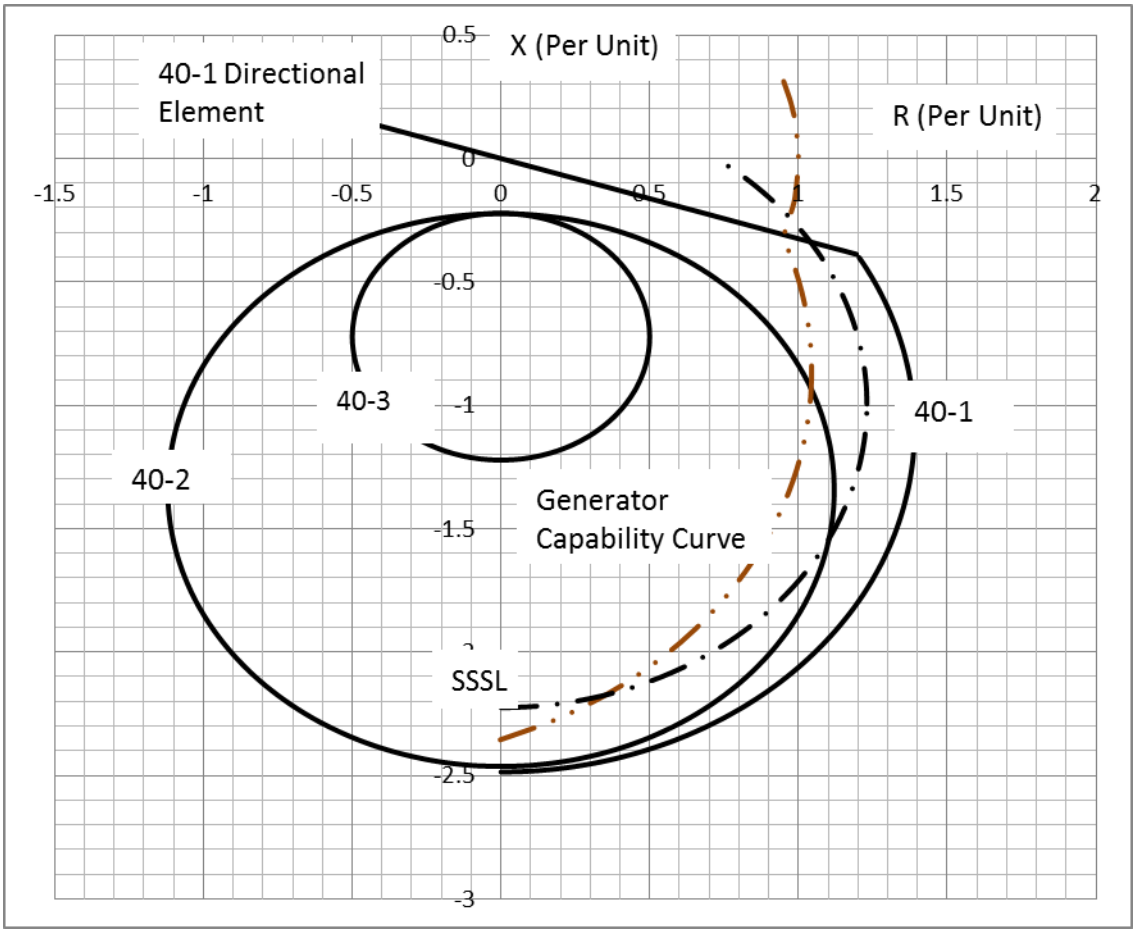

Figure 16: An R-X graph of typical impedance settings for loss-of-field relays.

[22] John Burdy, *Loss-of-excitation Protection for Synchronous Generators GER-3183*, General Electric Company.

Loss-of-field characteristic 40-1 has a wider impedance characteristic (positive offset) than characteristic 40-2 or characteristic 40-3 and provides additional generator protection for a partial loss of field or a loss of field under low load (less than 10% of rated). The tripping logic of this protection scheme is established by a directional contact, a voltage setpoint, and a time delay. The voltage and time delay add security to the relay operation for stable power swings. Characteristic 40-3 is less sensitive to power swings than characteristic 40-2 and is set outside the generator capability curve in the leading direction. Regardless of the relay impedance setting, PRC-019[23] requires that the "in-service limiters operate before Protection Systems to avoid unnecessary trip" and "in-service Protection System devices are set to isolate or de-energize equipment in order to limit the extent of damage when operating conditions exceed equipment capabilities or stability limits." Time delays for tripping associated with loss-of-field relays[24,25] have a range from 15 cycles for characteristic 40-2 to 60 cycles for characteristic 40-1 to minimize tripping during stable power swings. In PRC-026-2, 15 cycles establishes a threshold for applicability; however, it is the responsibility of the Generator Owner to establish settings that provide security against stable power swings and, at the same time, dependable protection for the generator.

The simple two-machine system circuit (method also used in the Application to Transmission Elements section) is used to analyze the effect of a power swing at a generator facility for load-responsive relays. In this section, the calculation method is used for calculating the impedance seen by the relay connected at a point in the circuit.[26] The electrical quantities used to determine the apparent impedance plot using this method are generator saturated transient reactance (X'_d), GSU transformer impedance (X_{GSU}), transmission line impedance (Z_L), and the system equivalent (Z_e) at the point of interconnection. All impedance values are known to the Generator Owner except for the system equivalent. The system equivalent is obtainable from the Transmission Owner. The sending-end and receiving-end source voltages are varied from 0.0 to 1.0 per unit to form the lens shape portion of the unstable power swing region. The voltage range of 0.7 to 1.0 results in a ratio range from 0.7 to 1.43. This ratio range is used to form the lower and upper loss-of-synchronism circle shapes of the unstable power swing region. A system separation angle of 120 degrees is used in accordance with PRC-026-2 – Attachment B criteria for each load-responsive protective relay evaluation.

Table 15 below is an example calculation of the apparent impedance locus method based on Figures 17 and 18.[27] In this example, the generator is connected to the 345 kV transmission system through the GSU transformer and has the listed ratings. Note that the load-responsive protective relays in this example may have ownership with the Generator Owner or the Transmission Owner.

[23] Coordination of Generating Unit or Plant Capabilities, Voltage Regulating Controls, and Protection

[24] Ibid, Burdy.

[25] *Applied Protective Relaying*, Westinghouse Electric Corporation, 1979.

[26] Edward Wilson Kimbark, *Power System Stability, Volume II: Power Circuit Breakers and Protective Relays*, Published by John Wiley and Sons, 1950.

[27] Ibid, Kimbark.

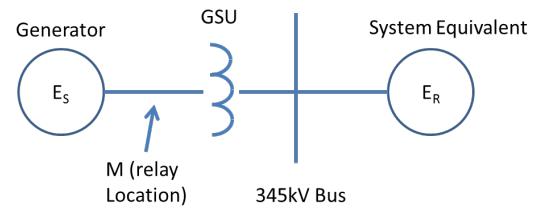

Figure 17: Simple one-line diagram of the system to be evaluated.

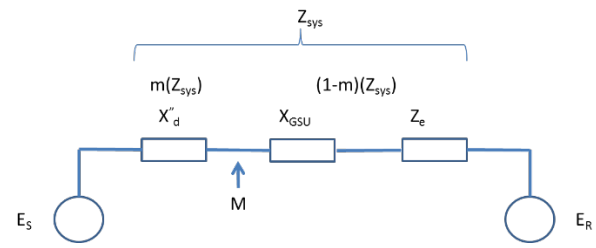

Figure 18: Simple system equivalent impedance diagram to be evaluated.[28]

Table15: Example Data (Generator)	
Input Descriptions	**Input Values**
Synchronous Generator nameplate (MVA)	940 MVA
Saturated transient reactance (940 MVA base)	$X'_d = 0.3845$ per unit
Generator rated voltage (Line-to-Line)	$20\ kV$
Generator step-up (GSU) transformer rating	$880\ MVA$
GSU transformer reactance (880 MVA base)	$X_{GSU} = 16.05\%$
System Equivalent (100 MVA base)	$Z_e = 0.00723\angle 90°$ per unit
Generator Owner Load-Responsive Protective Relays	
40-1	Positive Offset Impedance
	Offset = 0.294 per unit
	Diameter = 0.294 per unit
40-2	Negative Offset Impedance
	Offset = 0.22 per unit
	Diameter = 2.24 per unit
40-3	Negative Offset Impedance
	Offset = 0.22 per unit
	Diameter = 1.00 per unit
21-1	Diameter = 0.643 per unit
	MTA = 85°

[28] Ibid, Kimbark.

Table15: Example Data (Generator)	
50	I (pickup) = 5.0 per unit
Transmission Owned Load-Responsive Protective Relays	
21-2	Diameter = 0.55 per unit
	MTA = 85°

Calculations shown for a 120 degree angle and $E_S/E_R = 1$. The equation for calculating Z_R is:[29]

Eq. (106) $$Z_R = \left(\frac{(1-m)(E_S\angle\delta) + (m)(E_R)}{E_S\angle\delta - E_R}\right) \times Z_{sys}$$

Where m is the relay location as a function of the total impedance (real number less than 1)

E_S and E_R is the sending-end and receiving-end voltages

Z_{sys} is the total system impedance

Z_R is the complex impedance at the relay location and plotted on an R-X diagram

All of the above are constants (940 MVA base) while the angle δ is varied. Table 16 below contains calculations for a generator using the data listed in Table 15.

Table16: Example Calculations (Generator)			
The following calculations are on a 940 MVA base.			
Given:	$X'_d = j0.3845\ pu$	$X_{GSU} = j0.17144\ pu$	$Z_e = j0.06796\ pu$
Eq. (107)	$Z_{sys} = X'_d + X_{GSU} + Z_e$		
	$Z_{sys} = j0.3845\ pu + j0.17144\ pu + j0.06796\ pu$		
	$Z_{sys} = 0.6239\ \angle 90°\ pu$		
Eq. (108)	$m = \frac{X'_d}{Z_{sys}} = \frac{0.3845}{0.6239} = 0.6163$		
Eq. (109)	$Z_R = \left(\frac{(1-m)(E_S\angle\delta) + (m)(E_R)}{E_S\angle\delta - E_R}\right) \times Z_{sys}$		
	$Z_R = \left(\frac{(1-0.6163)\times(1\angle 120°) + (0.6163)(1\angle 0°)}{1\angle 120° - 1\angle 0°}\right) \times (0.6239\angle 90°)\ pu$		

[29] Ibid, Kimbark.

Table16: Example Calculations (Generator)	
	$Z_R = \left(\frac{0.4244 + j0.3323}{-1.5 + j\,0.866}\right) \times (0.6239\angle 90°)\ pu$
	$Z_R = (0.3116\angle -111.95°) \times (0.6239\angle 90°)\ pu$
	$Z_R = 0.194\angle -21.95°\ pu$
	$Z_R = -0.18 - j0.073\ pu$

Table 17 lists the swing impedance values at other angles and at E_S/E_R = 1, 1.43, and 0.7. The impedance values are plotted on an R-X graph with the center being at the generator terminals for use in evaluating impedance relay settings.

Table 17: Sample Calculations for a Swing Impedance Chart for Varying Voltages at the Sending-End and Receiving-End.

	E_S/E_R=1		E_S/E_R=1.43		E_S/E_R=0.7	
	Z_R		Z_R		Z_R	
Angle (δ) (Degrees)	Magnitude (pu)	Angle (Degrees)	Magnitude (pu)	Angle (Degrees)	Magnitude (pu)	Angle (Degrees)
90	0.320	-13.1	0.296	6.3	0.344	-31.5
120	0.194	-21.9	0.173	-0.4	0.227	-40.1
150	0.111	-41.0	0.082	-10.3	0.154	-58.4
210	0.111	-25.9	0.082	190.3	0.154	238.4
240	0.194	201.9	0.173	180.4	0.225	220.1
270	0.320	193.1	0.296	173.7	0.344	211.5

Requirement R2 Generator Examples

Distance Relay Application

Based on PRC-026-2– Attachment B, Criterion A, the distance relay (21-1) (i.e., owned by the Generation Owner) characteristic is in the region where a stable power swing would not occur as shown in Figure 19. There is no further obligation to the owner in this standard for this load-responsive protective relay.

The distance relay (21-2) (i.e., owned by the Transmission Owner) is connected at the high-voltage side of the GSU transformer and its impedance characteristic is in the region where a stable power swing could occur causing the relay to operate. In this example, if the intentional time delay of this relay is less than 15 cycles, the PRC-026 – Attachment B, Criterion A cannot be met, thus the Transmission Owner is required to create a CAP (Requirement R3). Some of the options include,

but are not limited to, changing the relay setting (i.e., impedance reach, angle, time delay), modify the scheme (i.e., add PSB), or replace the Protection System. Note that the relay may be excluded from this standard if it has an intentional time delay equal to or greater than 15 cycles.

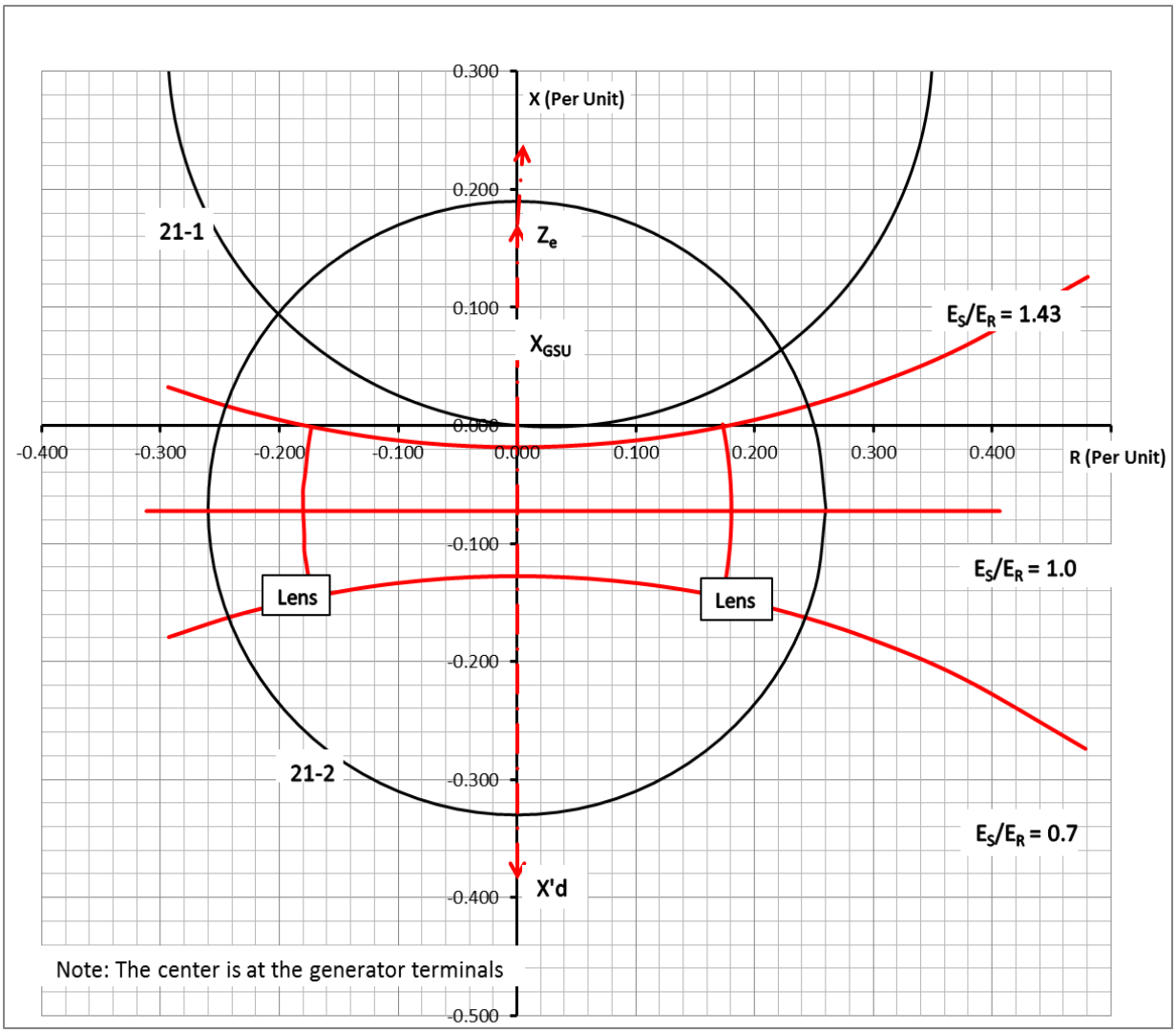

Figure 19: Swing impedance graph for impedance relays at a generating facility.

Loss-of-Field Relay Application

In Figure 20, the R-X diagram shows the loss-of-field relay (40-1 and 40-2) characteristics are in the region where a stable power swing can cause a relay operation. Protective relay 40-1 would be excluded if it has an intentional time delay equal to or greater than 15 cycles. Similarly, 40-2 would be excluded if its intentional time delay is equal to or greater than 15 cycles. For example, if 40-1 has a time delay of 1 second and 40-2 has a time delay of 0.25 seconds, they are excluded and there is no further obligation on the Generator Owner in this standard for these relays. The

loss-of-field relay characteristic 40-3 is entirely inside the unstable power swing region. In this case, the owner may select high speed tripping on operation of the 40-3 impedance element.

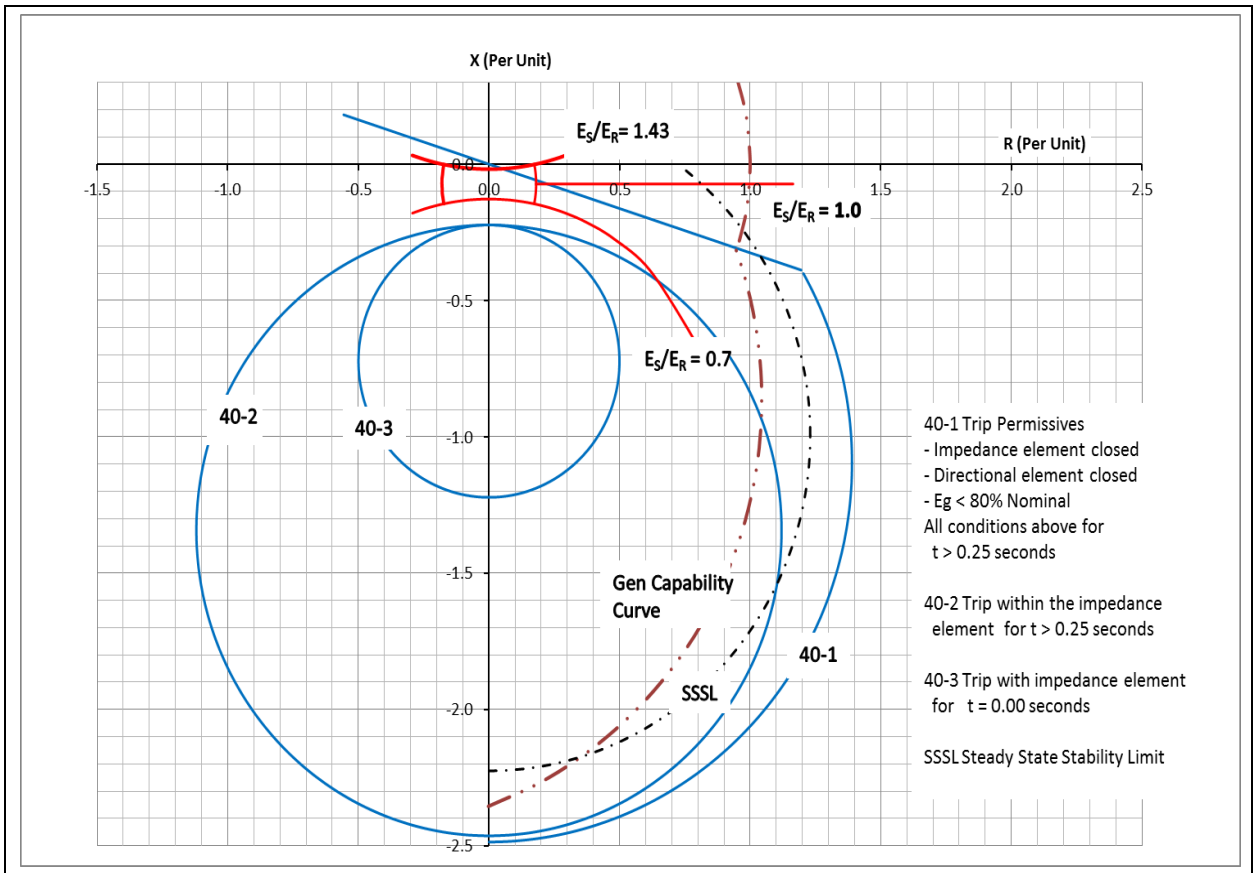

Figure 20: Typical R-X graph for loss-of-field relays with a portion of the unstable power swing region defined by PRC-026-2 – Attachment B, Criterion A.

Instantaneous Overcurrent Relay

In similar fashion to the transmission line overcurrent example calculation in Table 14, the instantaneous overcurrent relay minimum setting is established by PRC-026-2 – Attachment B, Criterion B. The solution is found by:

Eq. (110) $$I_{sys} = \frac{E_S - E_R}{Z_{\text{sys}}}$$

As stated in the relay settings in Table 15, the relay is installed on the high-voltage side of the GSU transformer with a pickup of 5.0 per unit. The maximum allowable current is calculated below.

$$I_{sys} = \frac{(1.05\angle 120° - 1.05\angle 0°)}{0.6239\angle 90°}\ pu$$

$$I_{sys} = \frac{1.819\angle 150°}{0.6239\angle 90°} pu$$

$$I_{sys} = 2.91 \angle 60° \, pu$$

The instantaneous phase setting of 5.0 per unit is greater than the calculated system current of 2.91 per unit; therefore, it meets the PRC-026-2 – Attachment B, Criterion B.

Out-of-Step Tripping for Generation Facilities

Out-of-step protection for the generator generally falls into three different schemes. The first scheme is a distance relay connected at the high-voltage side of the GSU transformer with the directional element looking toward the generator. Because this relay setting may be the same setting used for generator backup protection (see Requirement R2 Generator Examples, Distance Relay Application), it is susceptible to tripping in response to stable power swings and would require modification. Because this scheme is susceptible to tripping in response to stable power swings and any modification to the mho circle will jeopardize the overall protection of the out-of-step protection of the generator, available technical literature does not recommend using this scheme specifically for generator out-of-step protection. The second and third out-of-step Protection System schemes are commonly referred to as single and double blinder schemes. These schemes are installed or enabled for out-of-step protection using a combination of blinders, a mho element, and timers. The combination of these protective relay functions provides out-of-step protection and discrimination logic for stable and unstable power swings. Single blinder schemes use logic that discriminate between stable and unstable power swings by issuing a trip command after the first slip cycle. Double blinder schemes are more complex than the single blinder scheme and, depending on the settings of the inner blinder, a trip for a stable power swing may occur. While the logic discriminates between stable and unstable power swings in either scheme, it is important that the trip initiating blinders be set at an angle greater than the stability limit of 120 degrees to remove the possibility of a trip for a stable power swing. Below is a discussion of the double blinder scheme.

Double Blinder Scheme

The double blinder scheme is a method for measuring the rate of change of positive sequence impedance for out-of-step swing detection. The scheme compares a timer setting to the actual elapsed time required by the impedance locus to pass between two impedance characteristics. In this case, the two impedance characteristics are simple blinders, each set to a specific resistive reach on the R-X plane. Typically, the two blinders on the left half plane are the mirror images of those on the right half plane. The scheme typically includes a mho characteristic which acts as a starting element, but is not a tripping element.

The scheme detects the blinder crossings and time delays as represented on the R-X plane as shown in Figure 21. The system impedance is composed of the generator transient (X_d'), GSU transformer (X_T), and transmission system (X_{system}), impedances.

The scheme logic is initiated when the swing locus crosses the outer Blinder R1 (Figure 21), on the right at separation angle α. The scheme only commits to take action when a swing crosses the

inner blinder. At this point the scheme logic seals in the out-of-step trip logic at separation angle β. Tripping actually asserts as the impedance locus leaves the scheme characteristic at separation angle δ.

The power swing may leave both inner and outer blinders in either direction, and tripping will assert. Therefore, the inner blinder must be set such that the separation angle β is large enough that the system cannot recover. This angle should be set at 120 degrees or more. Setting the angle greater than 120 degrees satisfies the PRC-026-2 – Attachment B, Criterion A (No. 1, 1st bullet) since the tripping function is asserted by the blinder element. Transient stability studies may indicate that a smaller stability limit angle is acceptable under PRC-026-2 – Attachment B, Criterion A (No. 1, 2nd bullet). In this respect, the double blinder scheme is similar to the double lens and triple lens schemes and many transmission application out-of-step schemes.

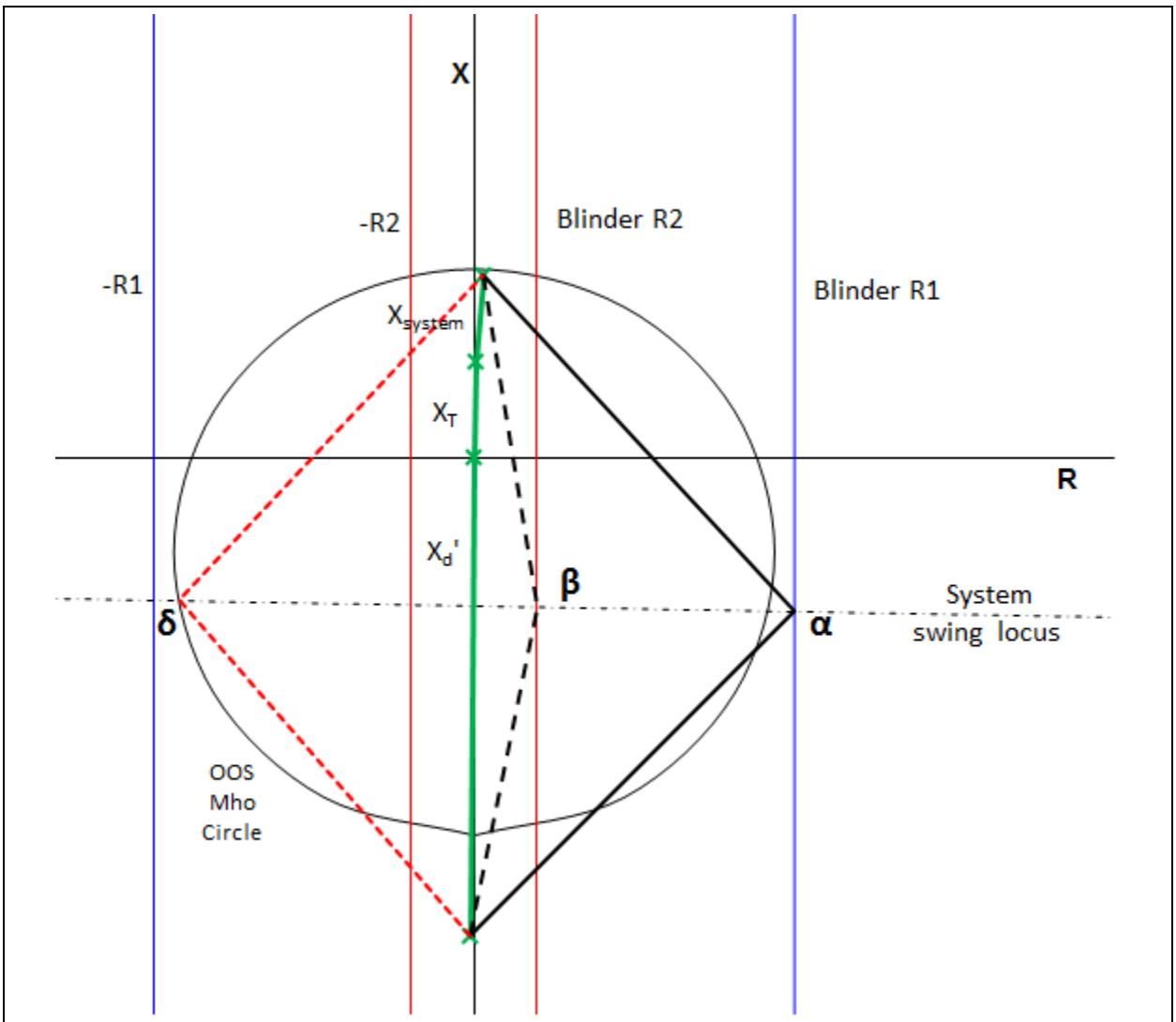

Figure 21: Double Blinder Scheme generic out of step characteristics.

Figure 22 illustrates a sample setting of the double blinder scheme for the example 940 MVA generator. The only setting requirement for this relay scheme is the right inner blinder, which must be set greater than the separation angle of 120 degrees (or a lesser angle based on a transient stability study) to ensure that the out-of-step protective function is expected to not trip in response to a stable power swing during non-Fault conditions. Other settings such as the mho characteristic, outer blinders, and timers are set according to transient stability studies and are not a part of this standard.

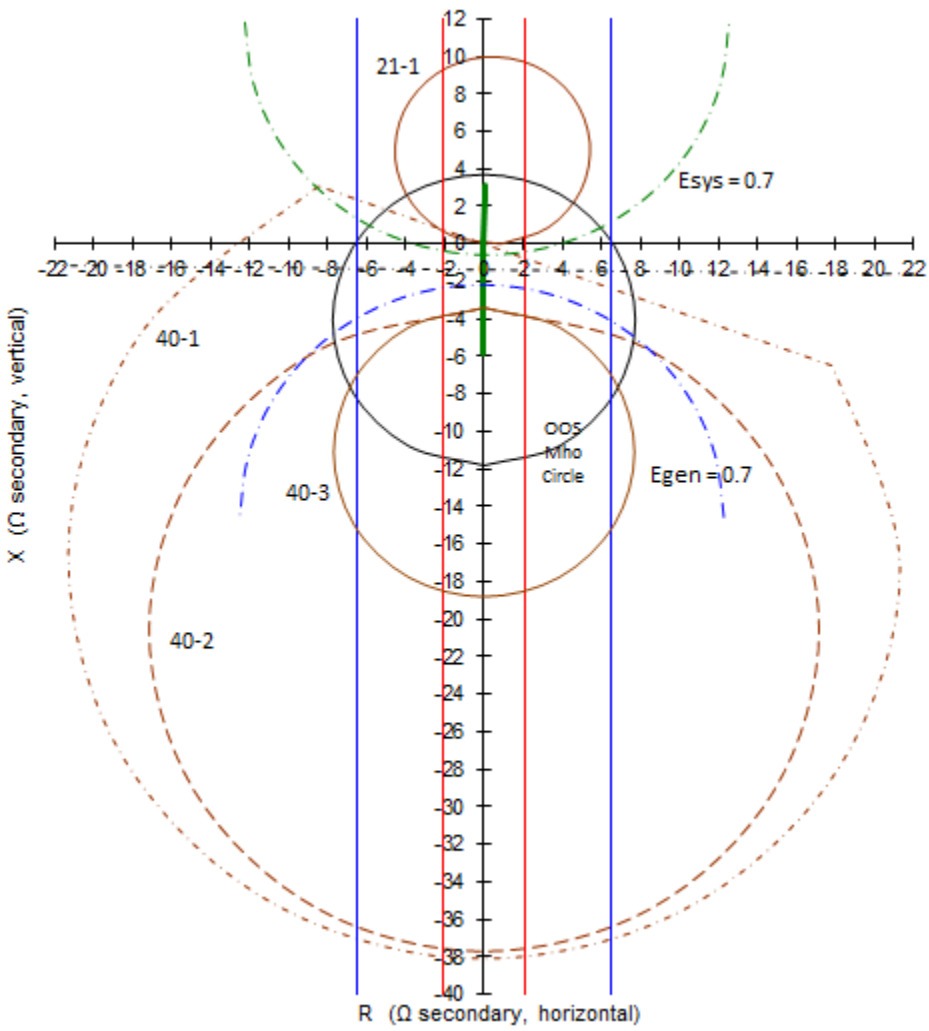

Figure 22: Double Blinder Out-of-Step Scheme with unit impedance data and load-responsive protective relay impedance characteristics for the example 940 MVA generator, scaled in relay secondary ohms.

Requirement R3

To achieve the stated purpose of this standard, which is to ensure that relays are expected to not trip in response to stable power swings during non-Fault conditions, this Requirement ensures that the applicable entity develops a Corrective Action Plan (CAP) that reduces the risk of relays tripping in response to a stable power swing during non-Fault conditions that may occur on any applicable BES Element.

Requirement R4

To achieve the stated purpose of this standard, which is to ensure that load-responsive protective relays are expected to not trip in response to stable power swings during non-Fault conditions, the applicable entity is required to implement any CAP developed pursuant to Requirement R3 such that the Protection System will meet PRC-026-2 – Attachment B criteria or can be excluded under the PRC-026-2 – Attachment A criteria (e.g., modifying the Protection System so that relay functions are supervised by power swing blocking or using relay systems that are immune to power swings), while maintaining dependable fault detection and dependable out-of-step tripping (if out-of-step tripping is applied at the terminal of the BES Element). Protection System owners are required in the implementation of a CAP to update it when actions or timetable change, until all actions are complete. Accomplishing this objective is intended to reduce the occurrence of Protection System tripping during a stable power swing, thereby improving reliability and minimizing risk to the BES.

The following are examples of actions taken to complete CAPs for a relay that did not meet PRC-026-2 – Attachment B and could be at-risk of tripping in response to a stable power swing during non-Fault conditions. A Protection System change was determined to be acceptable (without diminishing the ability of the relay to protect for faults within its zone of protection).

> **Example R4a:** Actions: Settings were issued on 6/02/2015 to reduce the Zone 2 reach of the impedance relay used in the directional comparison unblocking (DCUB) scheme from 30 ohms to 25 ohms so that the relay characteristic is completely contained within the lens characteristic identified by the criterion. The settings were applied to the relay on 6/25/2015. CAP was completed on 06/25/2015.
>
> **Example R4b:** Actions: Settings were issued on 6/02/2015 to enable out-of-step blocking on the existing microprocessor-based relay to prevent tripping in response to stable power swings. The setting changes were applied to the relay on 6/25/2015. CAP was completed on 06/25/2015.

The following is an example of actions taken to complete a CAP for a relay responding to a stable power swing that required the addition of an electromechanical power swing blocking relay.

> **Example R4c:** Actions: A project for the addition of an electromechanical power swing blocking relay to supervise the Zone 2 impedance relay was initiated on 6/5/2015 to prevent tripping in response to stable power swings. The relay installation was completed on 9/25/2015. CAP was completed on 9/25/2015.

The following is an example of actions taken to complete a CAP with a timetable that required updating for the replacement of the relay.

> **Example R4d:** Actions: A project for the replacement of the impedance relays at both terminals of line X with line current differential relays was initiated on 6/5/2015 to prevent tripping in response to stable power swings. The completion of the project was postponed due to line outage rescheduling from 11/15/2015 to 3/15/2016. Following the timetable change, the impedance relay replacement was completed on 3/18/2016. CAP was completed on 3/18/2016.

The CAP is complete when all the documented actions to remedy the specific problem (i.e., unnecessary tripping during stable power swings) are completed.

Justification for Including Unstable Power Swings in the Requirements

Protection Systems that are applicable to the Standard and must be secure for a stable power swing condition (i.e., meets PRC-026-2 – Attachment B criteria) are identified based on Elements that are susceptible to both stable and unstable power swings. This section provides an example of why Elements that trip in response to unstable power swings (in addition to stable power swings) are identified and that their load-responsive protective relays need to be evaluated under PRC-026-2 – Attachment B criteria.

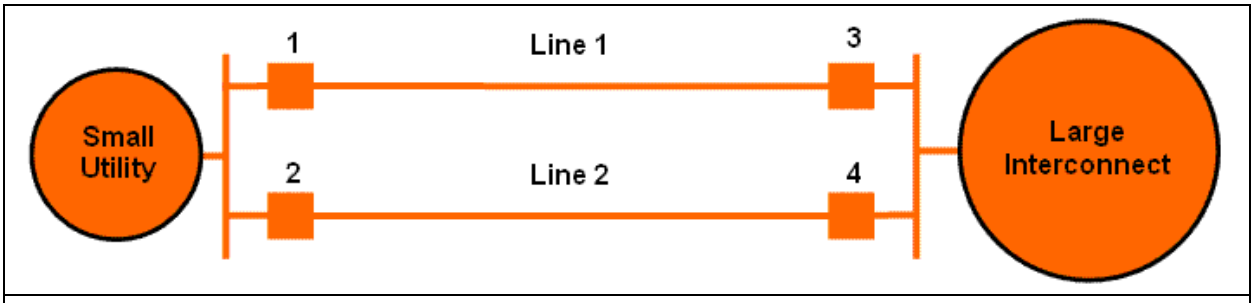

Figure 23: A simple electrical system where two lines tie a small utility to a much larger interconnection.

In Figure 23 the relays at circuit breakers 1, 2, 3, and 4 are equipped with a typical overreaching Zone 2 pilot system, using a Directional Comparison Blocking (DCB) scheme. Internal faults (or power swings) will result in instantaneous tripping of the Zone 2 relays if the measured fault or power swing impedance falls within the zone 2 operating characteristic. These lines will trip on

pilot Zone 2 for out-of-step conditions if the power swing impedance characteristic enters into Zone 2. All breakers are rated for out-of-phase switching.

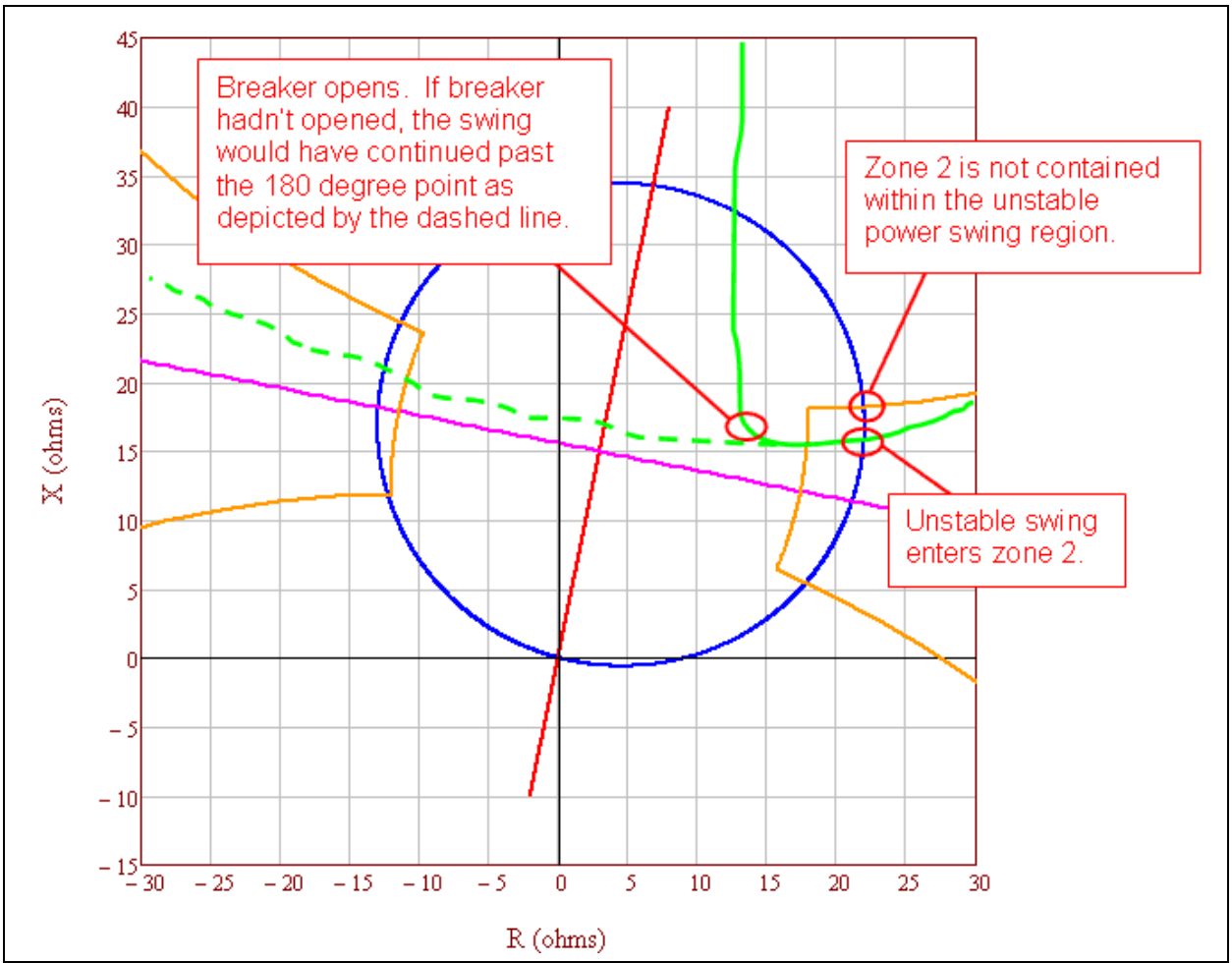

Figure 24: In this case, the Zone 2 element on circuit breakers 1, 2, 3, and 4 did not meet the PRC-026-2 – Attachment B criteria (this figure depicts the power swing as seen by relays on breakers 3 and 4).

In Figure 24, a large disturbance occurs within the small utility and its system goes out-of-step with the large interconnect. The small utility is importing power at the time of the disturbance. The actual power swing, as shown by the solid green line, enters the Zone 2 relay characteristic on the terminals of Lines 1, 2, 3, and 4 causing both lines to trip as shown in Figure 25.

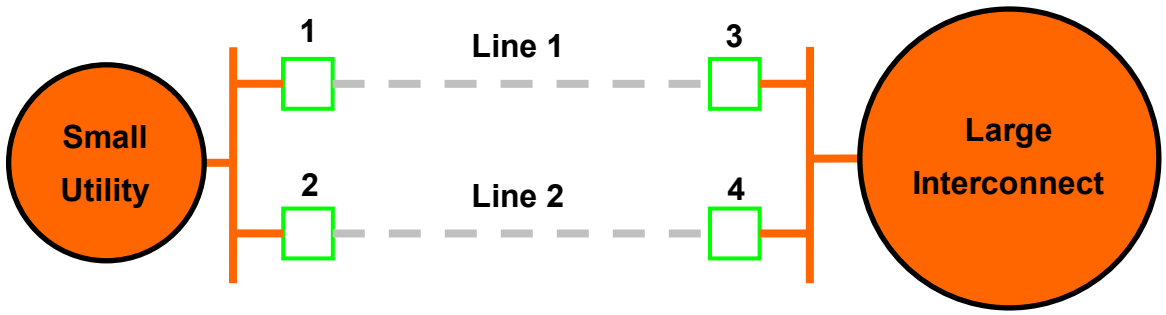

Figure 25: Islanding of the small utility due to Lines 1 and 2 tripping in response to an unstable power swing.

In Figure 25, the relays at circuit breakers 1, 2, 3, and 4 have correctly tripped due to the unstable power swing (shown by the dashed green line in Figure 24), de-energizing Lines 1 and 2, and creating an island between the small utility and the big interconnect. The small utility shed 500 MW of load on underfrequency and maintained a load to generation balance.

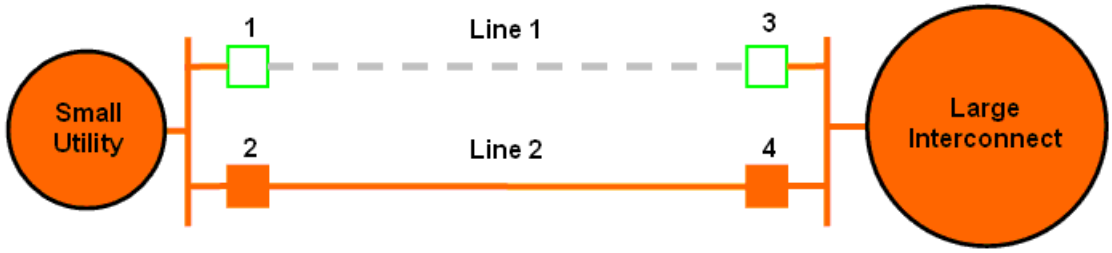

Figure 26: Line 1 is out-of-service for maintenance, Line 2 is loaded beyond its normal rating (but within its emergency rating).

Subsequent to the correct tripping of Lines 1 and 2 for the unstable power swing in Figure 25, another system disturbance occurs while the system is operating with Line 1 out-of-service for maintenance. The disturbance causes a stable power swing on Line 2, which challenges the relays at circuit breakers 2 and 4 as shown in Figure 27.

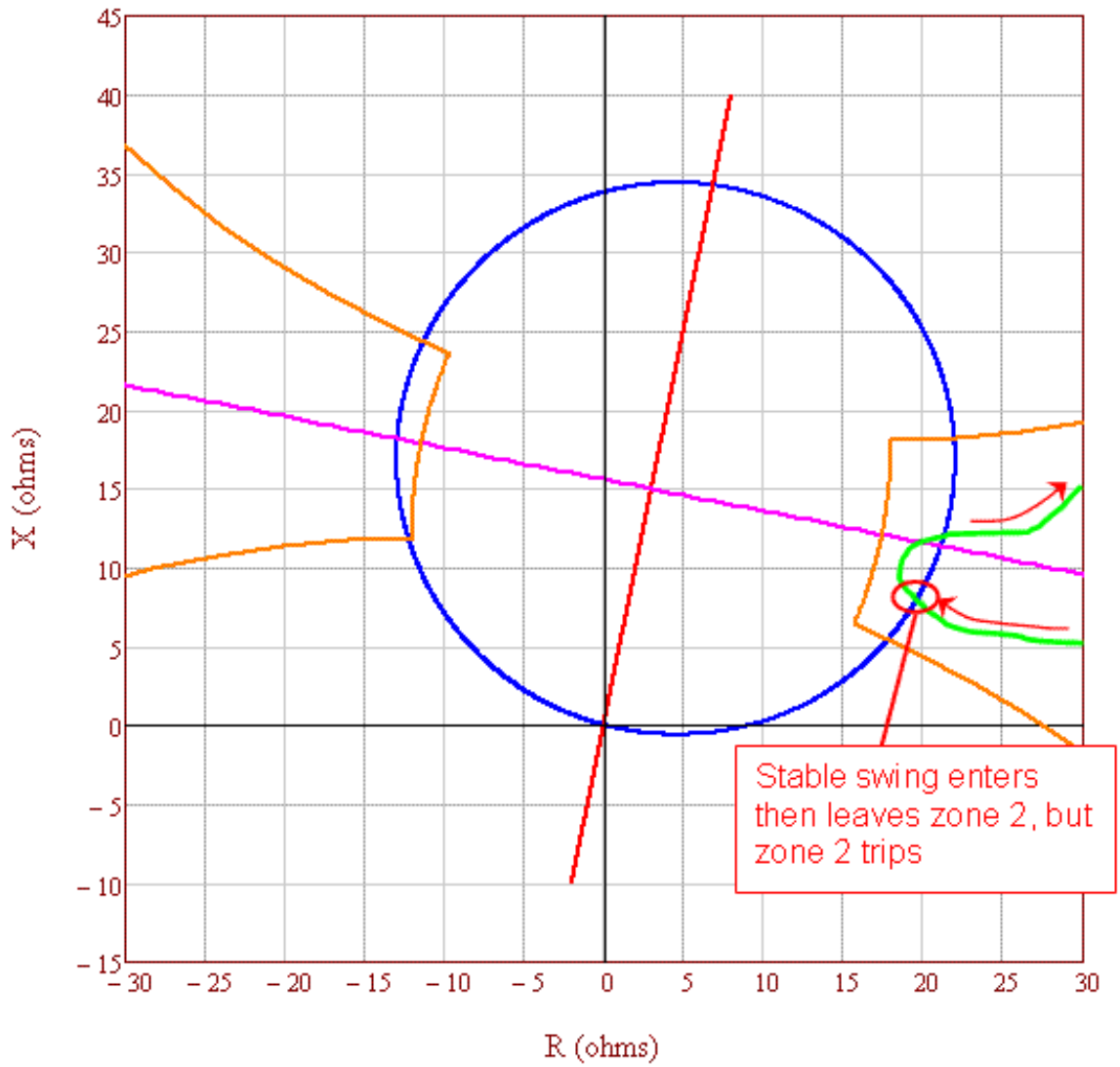

Figure 27: Relays on circuit breakers 2 and 4 were not addressed to meet the PRC-026-2 – Attachment B criteria following the previous unstable power swing event.

If the relays on circuit breakers 2 and 4 were not addressed under the Requirements for the previous unstable power swing condition, the relays would trip in response to the stable power swing, which would result in unnecessary system separation, load shedding, and possibly cascading or blackout.

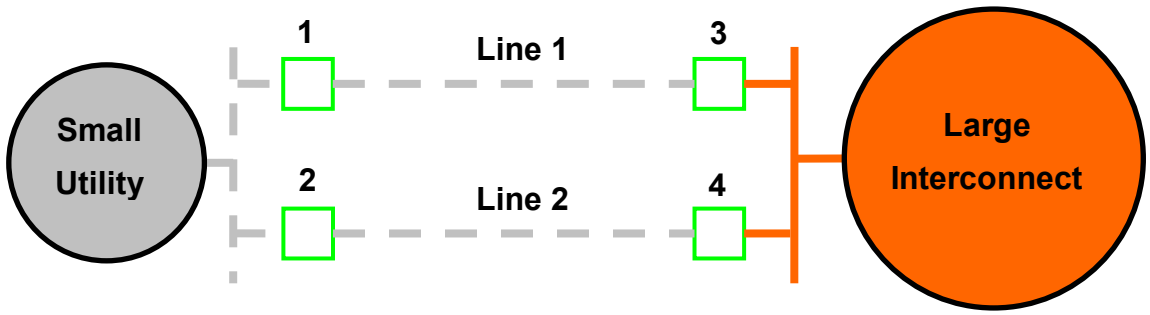

Figure 28: Possible blackout of the small utility.

If the relays that tripped in response to the previous unstable power swing condition in Figure 24 were addressed under the Requirements to meet PRC-026-2 - Attachment B criteria, the unnecessary tripping of the relays for the stable power swing shown in Figure 28 would have been averted, and the possible blackout of the small utility would have been avoided.

Rationale

During development of this standard, text boxes were embedded within the standard to explain the rationale for various parts of the standard. Upon BOT approval, the text from the rationale text boxes was moved to this section.

Rationale for R1

The Planning Coordinator has a wide-area view and is in the position to identify generator, transformer, and transmission line BES Elements which meet the criteria, if any. The criteria-based approach is consistent with the NERC System Protection and Control Subcommittee (SPCS) technical document *Protection System Response to Power Swings*, August 2013 ("PSRPS Report"),[30] which recommends a focused approach to determine an at-risk BES Element. See the Guidelines and Technical Basis for a detailed discussion of the criteria.

Rationale for R2

The Generator Owner and Transmission Owner are in a position to determine whether their load-responsive protective relays meet the PRC-026-2 – Attachment B criteria. Generator, transformer, and transmission line BES Elements are identified by the Planning Coordinator in Requirement R1 and by the Generator Owner and Transmission Owner following an actual event where the Generator Owner and Transmission Owner became aware (i.e., through an event analysis or Protection System review) tripping was due to a stable or unstable power swing. A period of 12 calendar months allows sufficient time for the entity to conduct the evaluation.

[30] NERC System Protection and Control Subcommittee, *Protection System Response to Power Swings*, August 2013:
http://www.nerc.com/comm/PC/System%20Protection%20and%20Control%20Subcommittee%20SPCS%2020/SPCS%20Power%20Swing%20Report_Final_20131015.pdf)

Rationale for R3

To meet the reliability purpose of the standard, a CAP is necessary to ensure the entity's Protection System meets the PRC-026-2 – Attachment B criteria (1st bullet) so that protective relays are expected to not trip in response to stable power swings. A CAP may also be developed to modify the Protection System for exclusion under PRC-026-2 – Attachment A (2nd bullet). Such an exclusion will allow the Protection System to be exempt from the Requirement for future events. The phrase, "…while maintaining dependable fault detection and dependable out-of-step tripping…" in Requirement R3 describes that the entity is to comply with this standard, while achieving their desired protection goals. Refer to the Guidelines and Technical Basis, Introduction, for more information.

Rationale for R4

Implementation of the CAP must accomplish all identified actions to be complete to achieve the desired reliability goal. During the course of implementing a CAP, updates may be necessary for a variety of reasons such as new information, scheduling conflicts, or resource issues. Documenting CAP changes and completion of activities provides measurable progress and confirmation of completion.

Rationale for Attachment B (Criterion A)

The PRC-026-2 – Attachment B, Criterion A provides a basis for determining if the relays are expected to not trip for a stable power swing having a system separation angle of up to 120 degrees with the sending-end and receiving-end voltages varying from 0.7 to 1.0 per unit (See Guidelines and Technical Basis).