Solar Photovoltaic Power Plant Modeling and Validation Guideline

MVWG

December 9, 2019

Table of Contents

Introduction

Along with development of the second-generation generic renewable energy system (RES) dynamic models, WECC Modeling and Validation Work Group has set up several guidelines for modeling bulk power system (BPS)-connected solar PV plants:

- Central Station Photovoltaic Power Plant Model Validation Guideline; dated June 17, 2015.
- WECC solar PV Power Plant Dynamic Modeling Guide; dated April 2014.
- WECC Guide for Representation of Photovoltaic Systems in Large-Scale Load Flow Simulations; dated August 2010.

The second-generation RES models represent most of the solar PV plants in the Western Interconnection. The guidelines above have been referred to extensively in producing the models for the solar PV plants. However, recent solar PV tripping events[1] due to system disturbance revealed some weakness of the modeling approach. At the same time, FERC has imposed new technical requirements on solar PV generating resources, such as FERC Order 827 and FERC Order 824. The modeling guidelines need an update to include lessons learned and consider alignment with the technical requirements.

This document examines the representation of BPS-connected solar PV plants in both power flow and dynamic data sets for BPS studies. The document outlines modeling techniques for all solar PV resources in the transmission and distribution systems. It also shows best practices for model validation of utility-scale solar PV systems (≥ 20 MVA) connected to the transmission network (60 kV and above).

Guideline Criteria

This is a consolidated document that augments and updates the following guidelines:[2]

- Central Station Photovoltaic Power Plant Model Validation Guideline; dated June 17, 2015
- WECC Solar Plant Dynamic Modeling Guide; dated April 2014

[1] NERC disturbance reports—

https://www.nerc.com/pa/rrm/ea/Pages/April-May-2018-Fault-Induced-Solar-solar PV-Resource-Interruption-Disturbances-Report.aspx

https://www.nerc.com/pa/rrm/ea/Pages/October-9-2017-Canyon-2-Fire-Disturbance-Report.aspx

https://www.nerc.com/pa/rrm/ea/Pages/1200-MW-Fault-Induced-Solar-Photovoltaic-Resource-Interruption-Disturbance-Report.aspx

[2] Approval of this guideline will supersede the listed guidelines; the latest technical guidance should be used for modeling BPS-connected solar PV resources.

- WECC Guide for Representation of Photovoltaic Systems in Large-Scale Load Flow Simulations; dated August 2010

The audience for this guideline includes solar PV plant owners who perform model validation, and transmission planners who verify validation data and develop interconnection-wide base cases of their planning areas.

Power Flow Modeling

Each central station solar PV plant (≥ 20 MVA and connected to 60 kV and above) is modeled explicitly in the power flow model. The power flow model includes:

- An explicit representation of the interconnection transmission line;
- An explicit representation of all station transformers;
- An equivalent representation of the collector systems;
- An equivalent representation of inverter pad-mounted transformers with a scaled MVA rating;
- An equivalent representation of generators scaled to match the total capacity of the plant; and
- An explicit representation of all plant-level reactive compensation devices either as shunts (fixed or switchable) or as generators (FACTs devices), if applicable.

The small or distribution-connected, in-front-of-the-meter solar PV plants may be aggregated at a high-voltage bus represented in the power flow. The power flow representation includes:

- A pseudo-transmission line (jumper) from the aggregated generator to the point of delivery; and
- The aggregated generator matching the total capacity of multiple plants that can be delivered to the point of delivery.

The behind-the-meter distributed solar PV are represented as aggregated distributed generation part of the load.

Dynamic Modeling

The dynamic model of a central station solar PV plant explicitly modeled in the power flow includes:

- A generator/converter module representing the typical solar PV inverter in the plant, scaled-up to match the plant's aggregate nameplate rating.
- A local electrical control module which translates real and reactive power references into current commands.
- A plant-level control module which sends real and reactive power references to the local electrical controller, if the plant-level control is put in place.
- Frequency and voltage protection modules, which show inverter protection settings under abnormal frequency and voltage conditions.

The dynamic model of solar PV plants connected at the distribution system represented by an aggregated generator in the power flow includes:

- Stand-alone DER_A model or PVD1[3] model

Behind-the-meter distributed solar PV resources are modeled by the DER_A component of the composite load model.

Model Validation Procedure

The steps of a successful model validation procedure are:

- Gather available data from commissioning tests, field tests, and grid disturbances;
- Clearly define the mode of operation, or control mode, of the plant;
- Work with the inverter manufacturer, system integrator, or plant operator to determine as many model parameters as possible beforehand;
- Minimize the set of dynamic model parameters that are available for tuning or parameter estimation; and
- Use proper engineering analyses, including tests and tuning, to bring measured and simulated data into agreement.

More Information

- WECC Generating Unit Model Validation Policy https://www.wecc.org/Administrative/WECC Generating Unit Model Validation Policy.pdf
- WECC Generating Facility Data, Testing, and Model Validation Requirements https://www.wecc.org/Reliability/WECC Gen Fac Testing and Model Validation Rqmts v 7-13-2012.pdf
- WECC Data Preparation Manual https://www.wecc.org/Reliability/2020 WECC Data Preparation Manual.pdf
- NERC reliability guideline on power plant model verification for inverter-based resources https://www.nerc.com/comm/PC_Reliability_Guidelines_DL/PPMV_for_Inverter-Based_Resources.pdf

[3] PVD1 models were used before the approval of DER_A model. For newly interconnecting solar PV plants at the distribution system, DER_A must be used.

Background

The composition of the generation fleet in the Western Interconnection is rapidly changing. As renewable energy plants have increased in capacity, standards and policies have been developed to ensure power flow and dynamic data sets accurately represent the plants. In particular, the latest versions of NERC MOD-026 and MOD-027 apply to all BES generating facilities with an aggregate nameplate rating of 75 MVA or larger. The standards, which are subject to enforcement, require accurate representation of a BES generating facility's reactive power response to system voltage variations, and its real power response to system frequency variations. Although these standards only apply to facilities with an aggregate nameplate rating of 75 MVA or larger, WECC policy is more stringent. It requires the submission of the same data for all plants connected to the transmission system (60 kV and above) with an aggregate nameplate rating of 20 MVA or larger. The WECC Generating Unit Model Validation policy requires generating facility data to be updated at least once every five years.

As the penetration of solar PV generation increases, the dynamic response of the system changes, in part due to a decline in inertia provided by thermal power plants. To conduct accurate planning studies and ensure the grid operates reliably, variable generation must be modeled with the same precision as synchronous generation. The goal is for the time domain simulation to match reality as closely as possible. Over many years, and with input from manufacturers, the WECC Renewable Energy Modeling Task Force (REMTF) has developed a suite of generic models for renewable energy plants and established guidelines for modeling solar PV plants—

- Central Station Photovoltaic Power Plant Model Validation Guideline; dated June 17, 2015.
- WECC solar PV Power Plant Dynamic Modeling Guide; dated April 2014.
- WECC Guide for Representation of Photovoltaic Systems in Large-Scale Load Flow Simulations; dated August 2010.

These guidelines have been used extensively in producing the models for the solar PV plants. However, recent tripping events due to system disturbance revealed some weakness of the modeling approach. At the same time, the technology is advancing and there are new technical requirements for solar PV generating resources. The modeling guidelines need an update to include lessons learned and consider alignment with the technical requirements.

Figure 1 shows the typical solar PV plant topology. The models in BPS studies consist of two parts:

1. A power flow model based on station equipment and an equivalent representation of the collector system, and
2. A dynamic model representing a scaled-up version of the typical solar PV inverter in the plant.

To accurately capture the behavior of a solar PV plant, both the power flow representation and dynamic model must be configured correctly using sound engineering judgment and due diligence.

Figure 1: Typical Solar PV Power Plant Topology

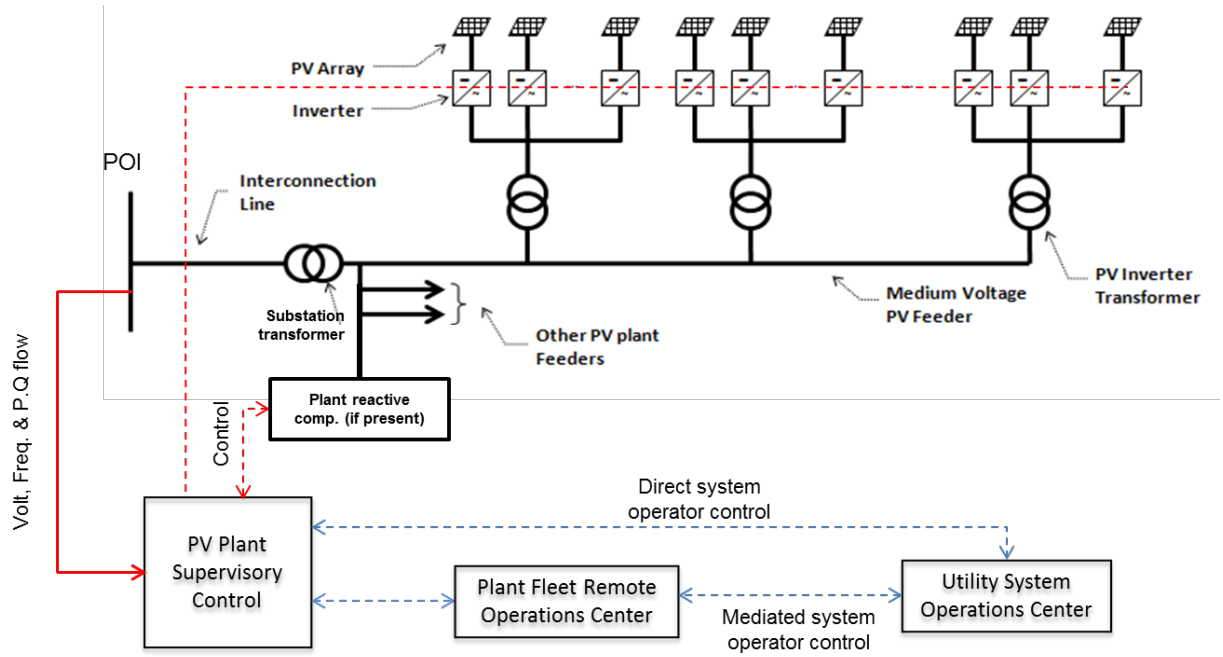

For every central station solar PV plant, the power flow model used in planning studies must include an explicit representation of the station transformer(s) and an equivalent representation of the collector system. The impedance of the collector system and the inverter pad-mounted transformer are non-negligible and should be included in the power flow model. Equivalent solar PV inverters **must not** be connected directly to a high-voltage bus or to the low-voltage side of a substation transformer.

Over the period of interest for planning studies, the behavior of a utility-scale solar PV inverter is driven primarily by its software or firmware and application-specific control settings. A key simplifying assumption of the generic models created by the REMTF is that the dynamics associated with the DC side of the inverter are neglected. This was a conscious decision made with industry input. In many cases, the dynamics associated with the DC side of the inverter are dominated by high-frequency content, which is beyond the interest of bulk power system studies.

The dynamic model for a central station solar PV plant includes 2 or 3 modules and has between 45 and 75 unique parameters, depending on whether a plant controller is in place. The resulting model has a high degree of flexibility and can be configured in over 30 unique modes of operation. With such a plethora of available control settings, it is essential to compile as much information about the system as possible before trying to tune the model parameters. Knowing the time constants and the mode of operation, i.e., control mode, of the plant is critical to achieving adequate model validation. Often, this means including the inverter manufacturer, system integrator, or plant operator in the process. There should be only a small number of parameters available for tuning to avoid multiple solutions of parameter fitting.

Note: The generic models developed by the REMTF apply to systems with a short-circuit ratio of 2 to 3 or more at the point of interconnection (POI). These generic models are **not** meant for studying parts of the system with low short-circuit levels. In that case, detailed, vendor-specific models may be needed.

1 Power Flow Representation

1.1 Central Station Solar PV Systems

The WECC Data Preparation Manual[4] states that single generating units 10 MVA or higher, or aggregated capacity of 20 MVA connected to the transmission system (60kV and above) through a step-up transformer(s), should be modeled as distinct generators in WECC base cases. It also states that collector-based systems such as wind or solar plants connected to the transmission grid may be represented as an equivalent generator, a low-voltage to intermediate-voltage transformer, an equivalent collector circuit, and a substation transformer.

The REMTF recommends that each central station solar PV plant (aggregated capacity ≥ 20 MVA and connected to 60 kV and above) is modeled explicitly in the power flow model. The power flow representation includes:

- An explicit representation of the interconnection transmission line, if one exists.
- An explicit representation of all substation transformers.
- An equivalent representation of the collector systems.
- An equivalent representation of inverter pad-mounted transformers with a scaled MVA rating except that the pad-mounted transformers are integrated with the inverters.
- An equivalent representation of generators scaled to match the total capacity of the plant.
- An explicit representation of all plant-level reactive compensation devices either as shunts (fixed or switchable) or as generators (FACTs devices), if applicable.

Typically, each solar PV plant is represented by the single-machine equivalence, as seen in Figure 2.

Figure 2: Illustrative Single-Generator Equivalent Power Flow Representation for a Solar PV Power Plant

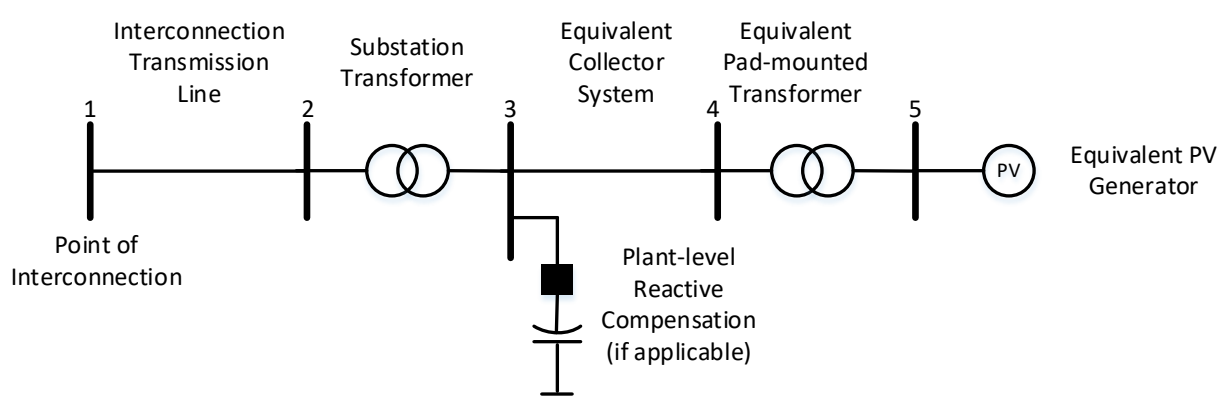

It is common that a solar PV plant has different makes of the inverters installed and these inverters have different reactive capability, control setup, and protection setup. In those cases, a multi-generator

[4] https://www.wecc.org/Administrative/2020 WECC Data Preparation Manual.pdf

representation is fitting. The determination of single or multiple generator equivalence should take into account the number of the main substation transformers, the collector system behind each main substation transformer, the placement of different makes of inverters behind the main substation transformers, the setting difference among inverters, and the mix of different inverters.

- Each substation transformer is explicitly represented in the power flow model.
- If the same inverters are installed behind the substation transformer, represent the inverters with one equivalent collector circuit, one equivalent pad-mounted transformer, and one equivalent generator.
- If different inverters with the same control and protection setting are installed behind one substation transformer, represent all inverters by one equivalent collector circuit, one equivalent pad-mounted transformer, and one equivalent generator.
- If inverters with different settings are installed behind the same substation transformer, model each type of inverter that has at least 10 MVA installed capacity by one equivalent generator with its own equivalent pad-mounted transformer. The type of inverters less than 10 MVA installed capacity may be aggregated with another type of inverter in one equivalent generator.

Figure 3: Illustrative Multiple-Generator Equivalent Power Flow Representation for a Solar PV Power Plant

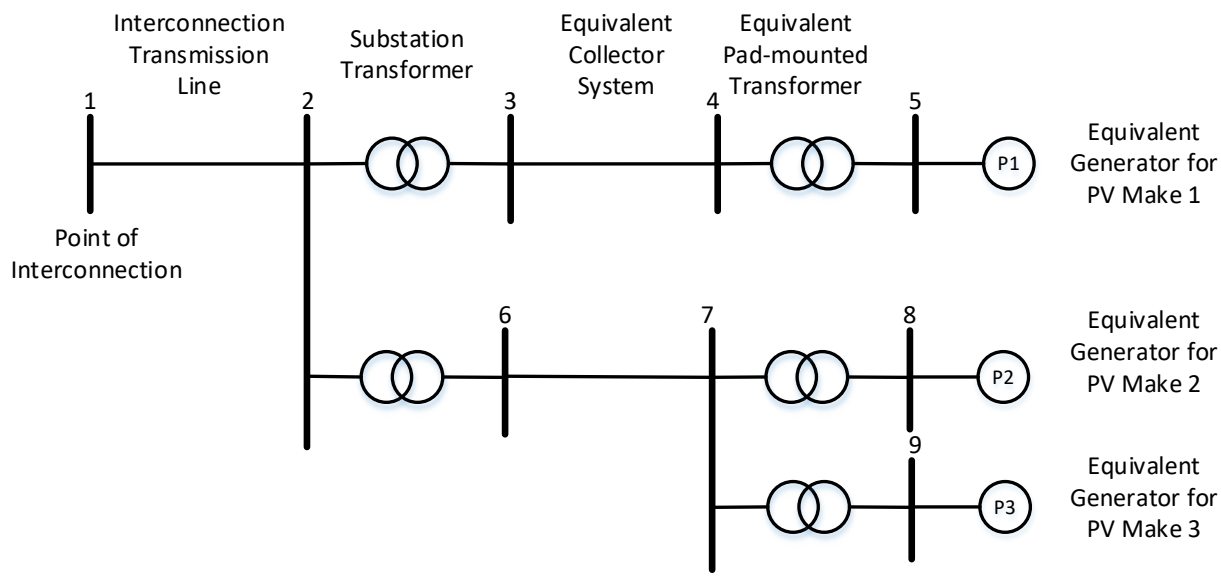

In these models, an equivalent generator stands for the total generating capacity of a group of inverters, the equivalent pad-mounted transformer represents the aggregate effect of all inverter to mid-voltage transformers, and the equivalent collector system branch represents the aggregate effect of the solar PV plant collector system. With the proper model parameters, this model should approximate solar PV plant load flow characteristics at the interconnection point, collector system real and reactive losses, and voltage profile at the terminals of the "average" inverter in the solar PV plant. Each part of the equivalent model is discussed below.

1.1.1 Implications of Collector System Equivalencing

As with any other model, the equivalent machine representation has some limitations. Due to collector system effects, terminal voltage of individual inverters could vary, especially in large solar PV plants where the electrical distance between inverters may be great. Inverters closest to the interconnection point may experience different terminal voltage compared to inverters that are electrically farthest from the interconnection point. In operation, terminal voltage of some inverters may reach control or protection limits, resulting in different terminal behavior or tripping. During the design stage, or in special cases, it may be reasonable to use a more detailed representation of the collector system to capture these details.

1.1.2 Interconnection Transmission Line

Standard data includes nominal voltage, positive-sequence line parameters (impedance and charging), and the line's normal and emergency ratings.

1.1.3 Solar PV Plant Substation Transformer

Transmission-connected solar PV plants need one or more substation transformers. Each substation transformer should always be represented explicitly. Standard data includes transformer nominal voltage of each winding, impedance, tap ratio, regulated bus and set point, and rating. Positive-sequence impedance for substation transformers ranges from 6 to 10%, and X/R ratio ranges from 20 to 50.

1.1.4 Plant- Level Reactive Compensation

Solar PV plants could have station fixed capacitors, switched capacitors, or both installed at the collector system. If present, shunt capacitors should be modeled as constant impedance devices in load flow to capture voltage-squared effects. The WECC Data Preparation Manual states that each switched capacitor should be modeled explicitly. Standard data includes nominal rating, impedance, and controlled device, if applicable. Operation of the shunt devices is coordinated with the plant-level reactive controller (see equivalent generator representation).

1.1.5 Equivalent Collector System

The collector systems of central-station solar PV plants consist of one or more medium-voltage feeders, as shown in Figure 1. Factors considered in feeder design include cost, real power losses, and voltage performance. A typical design goal is to keep average real power losses below 1%. At full output, real power losses can be as much as 2 to 4%. The collector system network is typically underground. For that reason, the equivalent collector system X/R ratio tends to be low compared to typical overhead circuits. The equivalent collector system impedance tends to be small, but not negligible, compared to the substation transformer impedance.

A simple method developed by NREL[5] can be used to derive equivalent impedance (Z_{eq}) and equivalent susceptance (B_{eq}) of a collector system consisting of radial elements. The computation is as follows:

$$Z_{eq} = R_{eq} + jX_{eq} = \frac{\sum_{i=1}^{I} Z_i n_i^2}{N^2},$$

$$B_{eq} = \sum_{i=1}^{I} B_i,$$

where I is the total number of branches in the collector system, Z_i is the impedance ($R_i + jX_i$) for ith branch, n_i is the number of inverters connected to the ith branch, and N is the total number of inverters in the solar PV plant. Branch impedance data can be taken from collector system design for the project. As stated above, the equivalent impedance computed this way approximates real and reactive losses seen by the "average inverter" in the solar PV plant, i.e.:

$$Z_{eq}(N * individual\ inverter\ current)^2 = \sum Z_i(n_i * individaul\ inverter\ current)^2$$

This calculation can be done in a spreadsheet. Figure 4 shows an example with nine branches (I = 9), and 21 inverters (N = 21). Table 1 shows the corresponding calculations. In this example, the inverters are 7 clusters of 3 inverters each. In general, larger solar PV power plants would have lower Z_{eq} and higher B_{eq} considering that more parallel feeders would be needed.

[5] E. Muljadi, A. Ellis, et al, "Equivalencing the Collector System of a Large Wind Power Plant," IEEE Power Engineering Society Annual Conference, Montreal, Quebec, June 12-16, 2006.

Figure 4: Sample Utility-Scale Solar PV plant topology

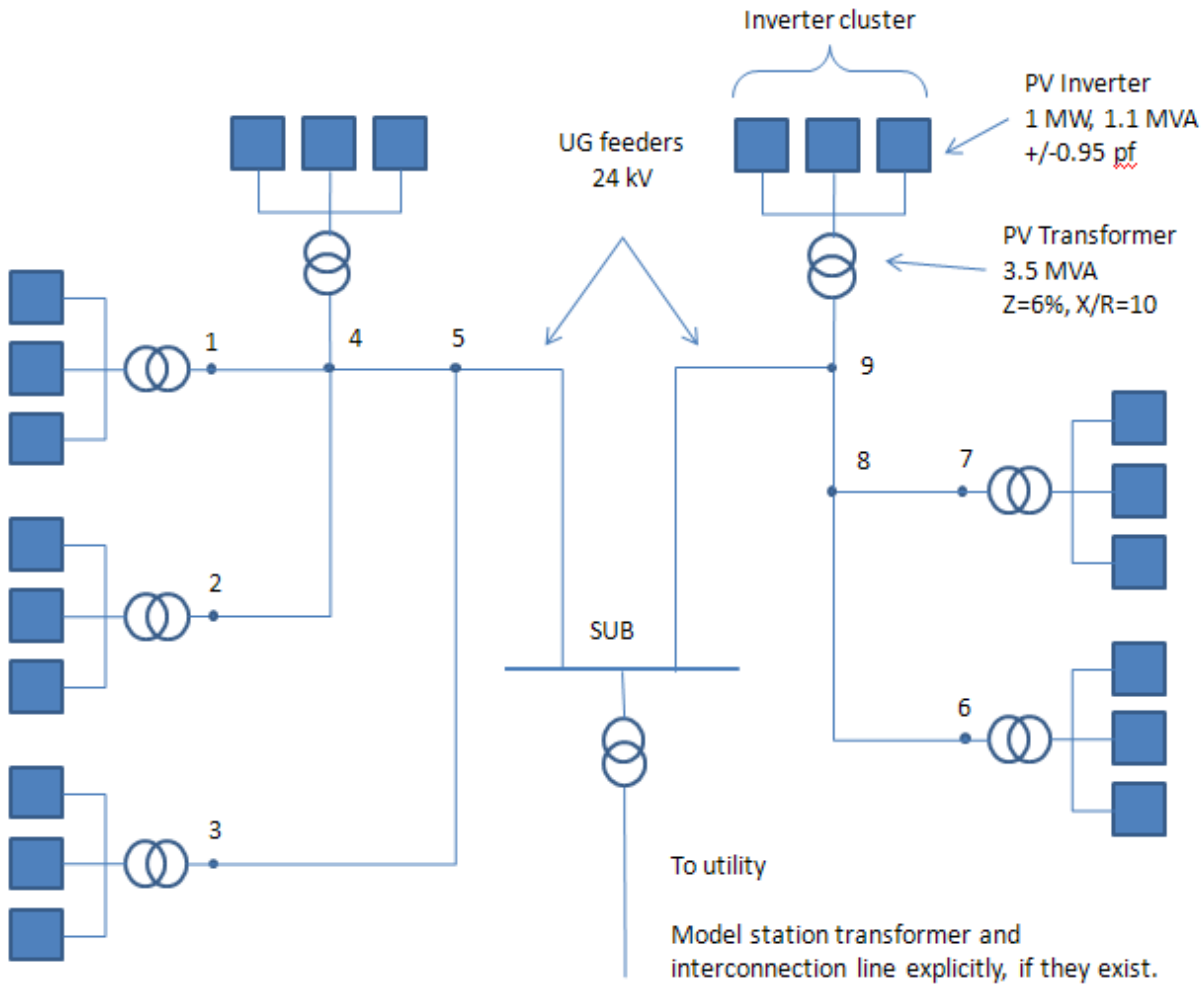

Table 1: Computation of collector system equivalent parameters for the sample system in Figure 4

From	To	R	X	B	n	R n^2	X n^2
1	4	0.03682	0.00701	0.000000691	3	0.33136	0.06307
2	4	0.02455	0.00467	0.000001036	3	0.22091	0.04205
4	5	0.02455	0.00467	0.000001036	9	1.98816	0.37843
3	5	0.02557	0.02116	0.000000235	3	0.23016	0.19042
5	**SUB**	**0.02557**	**0.02116**	**0.000000235**	**12**	**3.68251**	**3.04673**
6	8	0.03747	0.00868	0.000000561	3	0.33726	0.07809
7	8	0.02455	0.00467	0.000001036	3	0.22091	0.04205
8	9	0.02109	0.02501	0.000000199	6	0.75925	0.90025
9	**SUB**	**0.02109**	**0.02501**	**0.000000199**	**9**	**1.70831**	**2.02555**

RESULTS

Partial R sum	9.4788
Partial X sum	6.7666
N	21

Collector System Equivalent
(Same units as R, X & B data)

Req	0.021494	pu
Xeq	0.015344	pu
Beq	0.000005	pu

1.1.6 Equivalent Inverter Pad- Mounted Transformer

A solar PV plant has many pad-mounted transformers, each connected to one or more solar PV inverters.

If all pad-mounted transformers are identical, and each connects to the same number of inverters, the per-unit equivalent impedance (Z_{Teq}) and the equivalent MVA rating (MVA_{Teq}) can be computed as follows:

$$Z_{Teq} = Z_T$$
$$MVA_{Teq} = N \times MVA_T$$

In these equations, Z_T is the impedance of one transformer on its own MVA base (MVA_T). For the example above, the equivalent transformer impedance would be 6% on a 21 MVA base (7 X 3 MVA), with an X/R ratio of 10. If there are different transformer sizes or a different number of inverters are connected to each transformer, the method shown in Table 1 can be applied to the calculation of the equivalent transformer impedance. Pad-mounted transformers associated with utility-scale solar PV plants range from 500 kVA to 2 MVA, and have impedance of about 6% on the transformer MVA base, with an X/R ratio of about 8.

As the inverter design changes, it is more common to have integrated inverters and pad-mounted transformers. For the integrated design, the manufacturer's test and data are provided at the terminal of the integrated unit of inverter and pad-mounted transformer. Inverter control inputs are also taken from the terminal of the integrated unit. In that case, the pad-mounted transformers are not explicitly modeled in the power flow model. Instead, the integrated units are modeled by the equivalent generator in the next section.

1.1.7 Equivalent Generator Representation

For load flow simulations, represent the equivalent solar PV generator as a standard generator, not a negative load. Specify active power level and reactive power capability according to the guidelines below. According to the WECC Data Preparation Manual, a turbine type of 31, 32, or 33[6] must be set for the equivalent generator, except for solar PV with DC-side energy storage. Section 1.1.7.3 discusses modeling considerations for solar PV and energy storage hybrid resources.

1.1.7.1 Active Power Capability and Output Level

It is common for a solar PV plant to install more solar panels and inverters than its contracted MW capacity value. The MW capacity, i.e., PMAX in the base case model, of the equivalent generator must

[6] Turbine type 32 for photovoltaic (fixed), 33 for photovoltaic (tracking), 31 for photovoltaic (mixed or unknown solar tracking)

be set to the maximum output allowed by its interconnection agreement with the utility, instead of the physical capacity. The MVA base of the equivalent generator, on the other hand, represents the sum of the physical MVA rating of all the inverters.

Solar PV plant output varies as a function of solar input and, to a lesser extent, temperature. Typically, solar PV plants are designed to achieve full output for several hours of the day under clear-sky conditions. The real power level assumed for the solar PV plant depends on the study. For an interconnection study, a solar PV plant is modeled at full output. For other studies, solar PV plants may be modeled at partial output or zero output. For instance, solar PV active power output is zero in night-time, off-peak cases. Heavy summer scenarios typically correspond to mid-afternoon peak load periods, when solar PV is near 100% of output allowed by the generation interconnection agreement. For regional transmission planning studies, the power level should be set based on the average expected output level during the period of interest.

1.1.7.2 Reactive Power Capability

Interconnection requirements and performance standards addressing reactive power capability from large solar PV systems was set in FERC Order 827 dated June 16, 2016.[7] Newly interconnecting, non-synchronous generators are required to maintain a composite power delivery at continuous rated power output at the high-side of the generator substation. At that point, the non-synchronous generator must provide dynamic reactive power within the power factor range of 0.95 leading to 0.95 lagging, unless the transmission provider has established a different power factor range that applies to all non-synchronous generators in its control area on a comparable basis. Non-synchronous generators may meet the dynamic reactive power requirement by using a combination of the inherent dynamic reactive power capability of the inverter, dynamic reactive power devices (e.g., static VAr compensators), and static reactive power devices (e.g., capacitors) to make up for losses.

For solar PV power plants subject to FERC Order 827 requirement, the inverters typically supply the dynamic reactive capability. For example, if a solar PV power plant intends to have 100 MW gross output from the inverters, the plant needs to have at least 33 MVAr reactive capacity and the total installed capacity of the inverters could then be about 106 MVA. Alternatively, the 33 MVAr capacity could also be provided by auxiliary dynamic reactive power sources within the plant.

The inverter reactive power capability depends on the inverter DC voltage, inverter AC apparent current limit, ambient temperature, and the operating condition in terms of terminal voltage and active power current. Figure 5 shows an example of reactive capability curves for solar PV inverters at nominal voltage under different ambient temperatures. The temperature-dependent capability rating

[7] Federal Energy Regulatory Commission, Order No. 827, 16 June 2016. Available: http://www.ferc.gov/whats-new/comm-meet/2016/061616/E-1.pdf

may cause a derate of the active power capacity Pmax to maintain enough reactive capability. Depending on the power flow case, PMAX of the solar PV generators may be adjusted to represent the proper rating for the temperature condition. For example, PMAX at higher temperature should be used in a summer peak base case and PMAX at average temperature could be used in a spring, day-time, off-peak base case. The reactive capability of inverters at PMAX under the temperature must be represented as Qmax/Qmin for the equivalent generator.

Figure 5: Sample Inverter Reactive Capability Curve

[Source: NERC Reliability Guideline on BPS-Connected Inverter-Based Resource Performance]

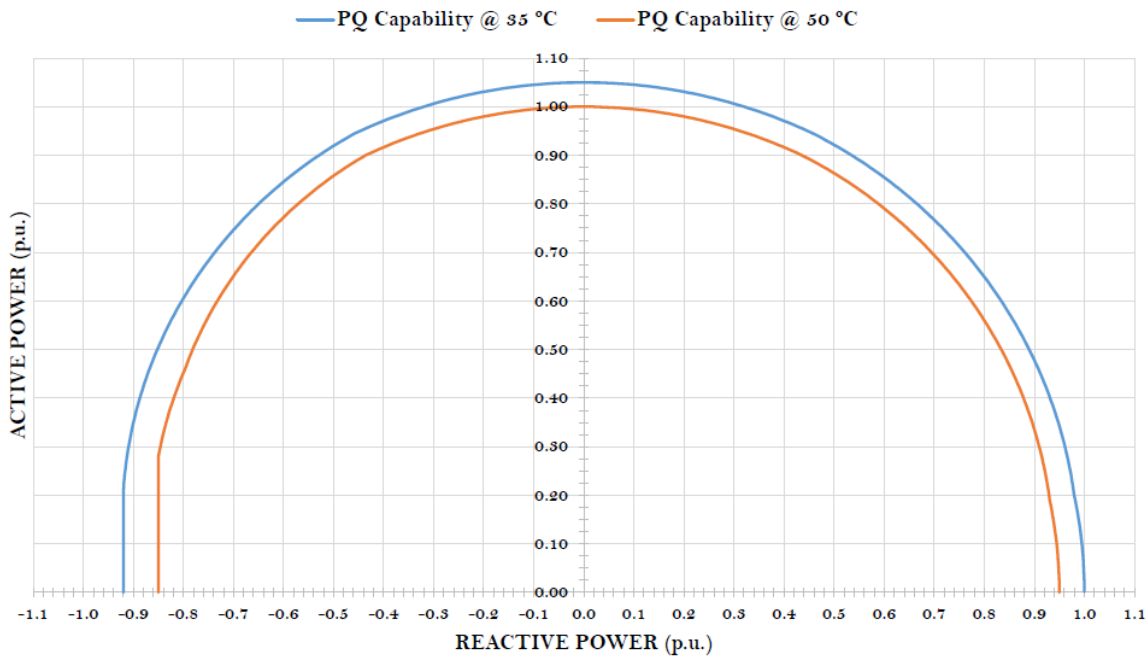

The plant reactive capability at the point of measurement includes the capability from all other reactive devices accounting for the plant internal reactive sources. Figure 6 shows plant reactive capability with and without the capacitor banks on, and the reactive capability requirement. At lower active output, the reactive capability requirement is lower as required by the power factor and shown as the V-shape curve in Figure 6.

Figure 6: Sample Plant Reactive Capability Curve

[Source: NERC Reliability Guideline on BPS-Connected Inverter-Based Resource Performance]

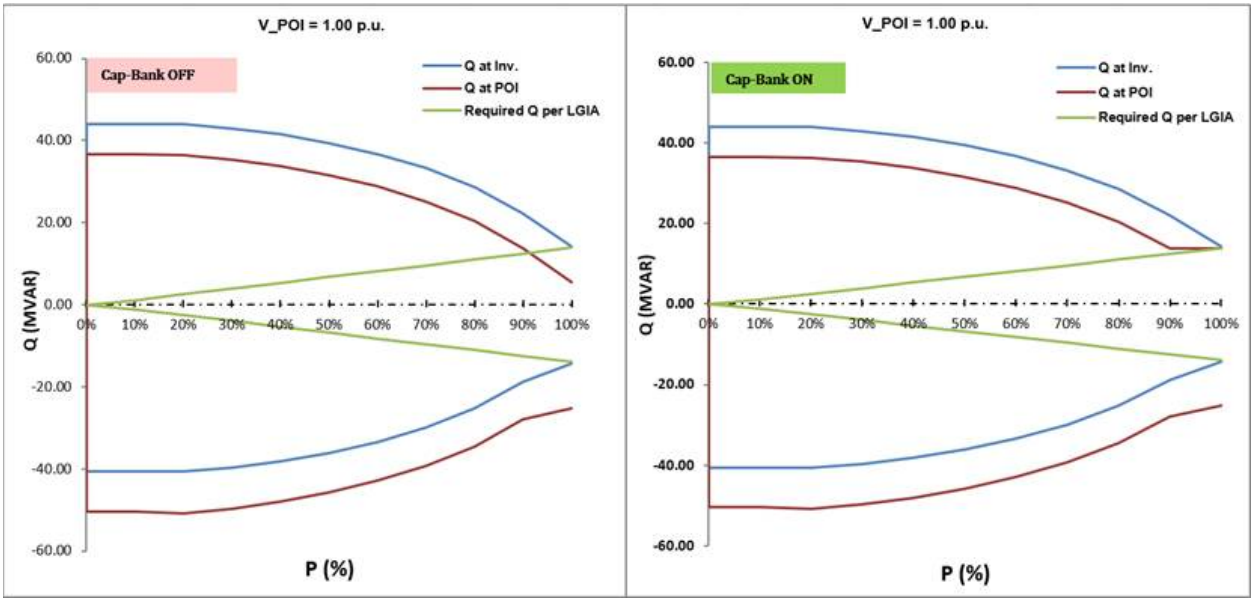

When needed, the power factor of individual inverters can be adjusted through a plant-level reactive controller to meet operating requirements at the point of measurement.[8] Several control modes are possible:

- Closed-loop voltage control—Maintain voltage schedule, within the reactive power capability of the solar PV plant, over a certain range of real power output. A small voltage hysteresis or deadband may be proper in some situations. For instance, the requirement may be to regulate voltage at the interconnection point within 1 or 2% of schedule.
- Voltage droop control—Increase or decrease reactive power output linearly, as a function of voltage. This type of control allows the solar PV plant to provide voltage support while avoiding large reactive power swings that a small solar PV plant would see when connected to a strong transmission system. A small deadband may be implemented.
- Power factor control—Maintain power factor at the point of measurement close to a specified level. For instance, the requirement may be to keep the power factor between 0.98 lead and unity at the interconnection point.
- Reactive power control—Maintain reactive power flow within specified limits. For instance, the requirement may be to limit reactive power flow at the interconnection point to 5 or 10 MVAr in either direction.

[8] The plant-level controller also coordinates operation of the switched capacitors, if present.

Representation of reactive power capability of the equivalent inverter depends on the reactive range of the inverters and how that range is used in operations. If the reactive capability is used up to the power factor requirement, the equivalent generator load flow model should be set to power factor control mode, i.e., the actual Qmax/Qmin is limited by the power factor at the active power output. If the full reactive capability is used, the best modeling approach is to define the capability curve in the Q-table and have the power flow software calculate the actual Qmax/Qmin from the Q-table.

The older solar PV inverters were designed to operate at unity power factor. Plant-level VAr devices were installed to meet the reactive capability requirement. The Qmax and Qmin for such solar PV inverters are zero and the plant-level VAr compensation is modeled in the power flow model.

1.1.7.3 Consideration for modeling solar PV and battery storage hybrid plant

Many of the new solar PV plants include on-site battery storage. Operation of the solar PV and battery storage are optimized to manage the fast ramping up of generation in the morning before the load goes up, extend the production hours at sunset, and better use the transmission capability. As such, the plant contractual capacity is lower than the sum of the installed solar PV capacity and battery storage capacity. If the solar PV and battery storage each has its own set of inverters, i.e., AC coupled (Figure 7), the solar PV and battery storage should be modeled explicitly by separate equivalent generators, equivalent pad-mounted transformers, and equivalent collectors. The turbine type of the solar PV generator is set to 31, 32, or 33.[6] The turbine type of the battery generator is set to 42. The reactive capability requirement applies to the total solar PV and battery storage generators. The solar PV and battery storage each may not be able to meet the requirement alone.

If the solar PV and battery storage are DC-coupled (Figure 8), one equivalent generator will represent the inverters for both solar PV and battery storage. The turbine type of the generator is set to 33 if the storage does not charge from the grid and 42 if it does. A negative Pmin of the equivalent generator represents the maximum charging power if the battery storage charges from the grid.

Figure 7: AC Coupled Solar PV and Energy Storage

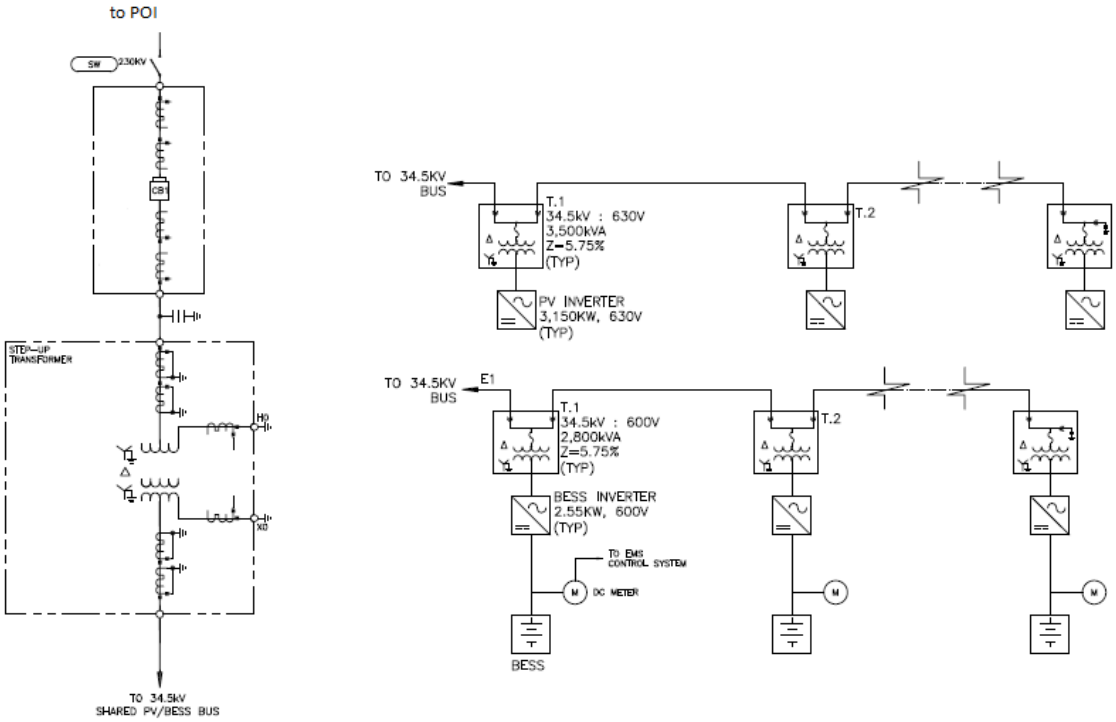

Figure 8: DC Coupled Solar PV and Energy Storage

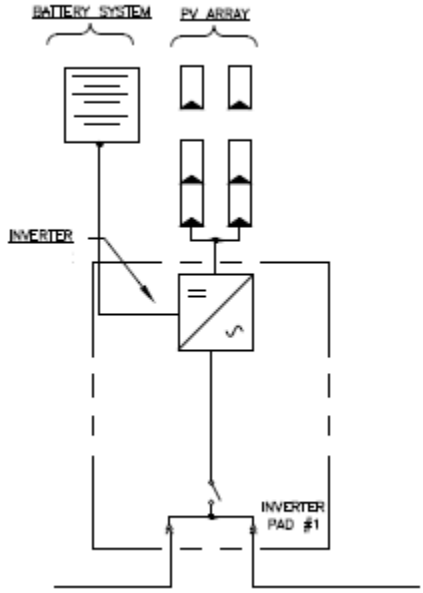

1.2 Representation of Distribution- Connected Solar PV Systems

In some ways, representation of distribution-connected solar PV systems in transmission studies is more challenging. In WECC base cases, the distribution system is not typically represented, and the load and the distributed generation are lumped at the transmission substation transformers. The in-

front-of-the-meter distributed solar PV generations are represented by an equivalent aggregated generator connecting to the lower side of the transmission substation transformer by a pseudo transmission line (jumper). The behind-the-meter distributed generations are modeled as the DG component of the load. Representing solar PV generation and other distributed generation as a separate component of the load would allow for proper load scaling and would give planners the ability to account for existing and emerging performance standards applicable to distributed generation, including anti-islanding, voltage tolerance envelope and reconnection, reactive support, and etc. More information on distributed energy resource modeling, see the NERC reliability guideline.[9]

1.3 Modeling during post transient power flows

Modeling of solar PV generation and reactive compensation components should be consistent with WECC post-transient methodology. Control devices that can complete switching or operation within three minutes (e.g., SVCs, STATCOMS, and shunts under automatic control) should not be blocked. Devices that need operator action should be blocked. The equivalent generator should have the Base Load Flag set to "0" if the plant automatically controls active output in response to both low frequency and high frequency with operating headroom; or set to "1" if the output does not increase in response to low frequency; or set to "2" if the output does not respond to either low frequency or high frequency.

[9] https://www.nerc.com/comm/PC_Reliability_Guidelines_DL/Reliability_Guideline_-_DER_Modeling_Parameters_-_2017-08-18_-_FINAL.pdf

2 Dynamic Modeling

2.1 Active Power/Frequency Control

Average irradiance over a large solar PV plant can change during a typical dynamic simulation (up to 30 seconds). By default, the WECC generic models assume a fixed reference generator output in the solved power flow case. Presently, there is no provision for incorporating simulation of irradiance variability in large-scale system studies. This approach is prudent given that the effect of automatic generation control is not included in dynamic simulations. The generic models do allow for the specification of active power control, including ramp rate limits, frequency response, and active/reactive power priority during voltage dips. Primary frequency response capability must be enabled for the newly installed solar PV inverters within its operating limits. Solar PV resources typically run at the full output allowed by the radiance condition, so, they do not have upward headroom for primary frequency response. In that case, both the power flow model and the dynamic model must reflect the downward-only primary frequency response. However, the solar PV plant may reserve upper headroom for primary frequency response should the solar PV plant be running at a reduced MW output, e.g., to provide reactive capability or as directed by the transmission operator, when the low system frequency condition occurs.

2.2 Reactive Power /Voltage Control

Reactive power capability and response characteristics are an important consideration in system studies. A variety of reactive power control modes can be used in a solar PV power plant. Typically, central station solar PV plants must keep the voltage at the point of measurement at the given voltage schedule, up to the required reactive power capability. Implementation of such requirement varies among different utilities. The dynamic models should reflect the implementation by coordinating the plant controller model and inverter electrical control model. During a dynamic event, the reactive power response is the net result of fast inverter response and slower supervisory control by the plant controller. Under large disturbance, as shown by abnormal voltage conditions, the slower plant control freezes and the fast inverter control takes over. The power factor requirement does not limit the inverter reactive power output during the transient period. Instead, it is limited by the inverter current rating and the priority between producing active current and reactive current. The reactive current limits in the dynamic model must be wider than Qmax/Qmin in the power flow model.

2.3 Fault Ride- Through and Representation of Protection Limits

An important part of a dynamic performance evaluation is whether the solar PV system trips off-line for a given voltage or frequency disturbance. We do not recommend the equivalent representation and simplified dynamic models described here for evaluation of compliance of fault ride-through capability with the requirement. The simplified representation is generally sufficient for system studies. Whether

an inverter will ride through a voltage disturbance depends on the type of fault and the magnitude of the remaining voltage at the inverter terminals. The control actions that affect the behavior of the inverter during the span of a short fault are not modeled in detail in the generic dynamic models. This limitation is acceptable because system studies focus on the characteristics of the dynamic recovery, rather than on system conditions during the fault. Considering that terminal voltage can vary significantly across the plant, a single machine representation has obvious limitations with respect to assessment of the voltage ride through capability.

Some solar PV inverters use momentary cessation as a means of ride-through. The inverters are still connected but stop current injection into the grid during low or high voltage conditions outside the continuous operating range. The momentary cessation behavior could be modeled with voltage-dependent current limits in the dynamic models. Since the equivalent generator and collector system are modeled, the model could only be an approximation. Furthermore, when a mix of inverters deploying different momentary cessation settings are installed in the solar PV inverters, modeling all inverters by one equivalent generator would make the model inaccurate. It is better to model each group of inverters by one equivalent generator.

3 WECC Generic Models

The WECC Renewable Energy Modeling Task Force (REMTF) has developed a set of dynamic models for renewable energy power plants using a modular approach. The models are available as standard-library models in commercial simulation platforms used in WECC.

3.1 Technical Specifications for the WECC Generic Models

The WECC generic models for solar PV plants are based on the following technical specifications:

- The models must be non-proprietary and accessible to transmission planners and grid operators without the need for non-disclosure agreements.
- The models must provide a reasonably good representation of dynamic electrical performance of solar photovoltaic power plants at the point of interconnection with the ≥ 60 kV electric system, and not necessarily within the solar PV power plant itself.
- The models must be suitable for studying system response to electrical disturbances, not solar irradiance transients (i.e., we assume available solar power is constant throughout the simulation). Electrical disturbances of interest are primarily balanced transmission grid faults (external to the solar PV power plant), typically lasting three to nine cycles, and other major disturbances such as loss of generation or large blocks of load.
- Plant owners, inverter manufacturers, and model users (with guidance from the integrators and manufacturers) must be able to represent differences among specific inverter and plant controller responses by selecting proper model parameters and feature flags.
- Simulations using these models typically cover 20 to 30 seconds, with integration time steps ranging from 1 to 10 milliseconds.
- The models must be valid for analyzing electrical phenomena in the frequency range of zero to about 10 Hz.
- The models must incorporate protection functions that trip the associated generation represented by the model or must include the means for external modules to connect to the model to carry out such generator tripping.
- The models must be initialized from a solved power flow case with minimal user intervention needed in the initialization process.
- Power level of interest is primarily 100% of plant nominal rating. However, performance must be valid, within a reasonable tolerance, for the variables of interest (current, active power, reactive power, and power factor) within a range of 25 to 100% of rated power.
- The models must perform accurately for systems with a short circuit ratio of two to three and higher at the point of interconnection.
- External reactive compensation and control equipment (i.e., external to the solar PV inverters) must be modeled separately using existing WECC-approved models.

- WECC approved the use of two generic dynamic models for solar PV plants: (a) a model consisting of plant controller, electrical controls, and grid interface modules intended for large-scale solar PV plants; and (b) a simplified model intended for distribution-connected, aggregated solar PV plants.

3.2 WECC Generic Model for Large- scale solar PV Plants

3.2.1 Model Structure

Dynamic representation of large-scale solar PV plants requires the use of three renewable energy (RE) modules listed below and shown in Figure 9. These modules, and others, are also used to represent wind and inverter-based energy storage power plants.

- REGC (REGC_*) module, used to represent the generator/converter (inverter) interface with the grid. It processes the real and reactive current command and outputs of real and reactive current injection into the grid model.
- REEC (REEC_*) module, used to represent the electrical controls of the inverters. It acts on the active and reactive power reference from the REPC module, with feedback of terminal voltage and generator power output, and gives real and reactive current commands to the REGC module.
- REPC (REPC_*) module, used to represent the plant controller. It processes voltage and reactive power output to emulate volt/VAr control at the plant level. It also processes frequency and active power output to emulate active power control. This module gives active reactive power commands to the REEC module.

Figure 9: Block Diagrams of Different Modules of the WECC Generic Models

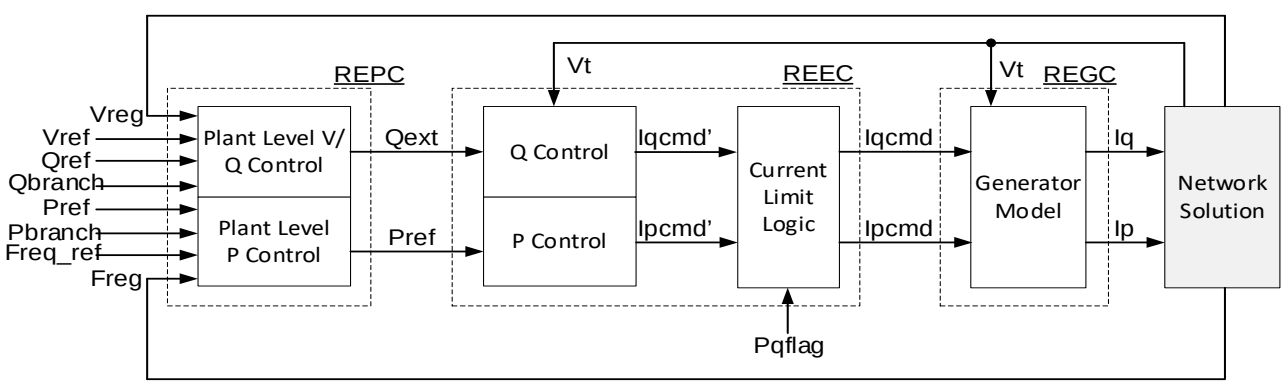

These modules do not include inverter or plant protection. However, existing generator protection models can be used to represent time-delayed voltage and frequency protection settings. Table 2 shows the list of solar PV power plant simulation modules used in two simulation platforms commonly used at WECC. Although the internal use may differ across simulation platforms, the modules have the same functionality and parameter sets.

Table 2: Models for Solar PV Power Plant in PSLF and PSSE

Module	PSLF modules	PSSE modules
Grid interface	regc_*	REGC*
Electrical controls[10]	reec_*	REEC*
Plant controller	repc_*	REPC*
Voltage/frequency protection	lhvrt/lhfrt	VRGTPA/FRQTPA

Strictly speaking, only the REGC must run a simulation; however, the rest of the modules are needed to enable control functionality.

The appendix has a detailed description of the large-scale solar PV plant dynamic modules. Default parameters are given; however, these are for model testing only. They do not represent the performance of any one plant or equipment. Consultation with the inverter manufacturer and the plant operator is needed to select proper model parameters.

3.2.2 Model Invocation

The model invocation varies according to the software platform. Users must follow the instructions provided with the model documentation. The example described below is for the PSLF platform, using the simple test system shown in Figure 5. This example is for a plant rated 110 MVA plant, which could say correspond to a solar PV plant rated 104.5 MW and inverters sized for 0.95 leading or lagging power factor at rated power and rated voltage. In this example, the equivalent generator is controlling voltage at Bus 5, while the plant controller controls voltage at Bus 2.

Figure 10: Test System for Large-Scale Solar PV Plant Model

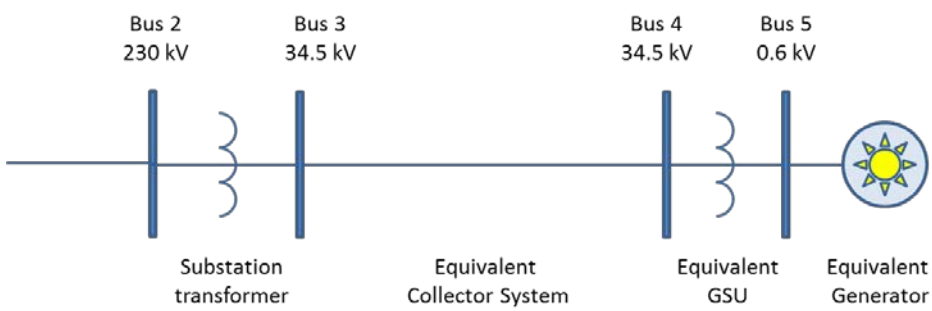

regc_a 5 "Test" 0.6 "1 " : #9 mvab=110.0 "lvplsw" 0.000000 "rrpwr" 1.40000 "brkpt" 0.900000 "zerox" 0.500000 "lvpl1" 1.0000 "vtmax" 1.1000 "lvpnt1" 0.050000 "lvpnt0" 0.01 "qmin" -1.000000 "accel" 0.7 "tg" 0.020000 "tfltr" 0.01000 "iqrmax" 20.00000 "iqrmin" -20.00000 "xe" 0.0

reec_a 5 "Test" 0.6 "1 " : #9 "mvab" 0. "vdip" 0.500000 "vup" 1.1000 "trv" 0.01000 "dbd1" -0.05 "dbd2" 0.05 "kqv" 2.0000 "iqh1" 1.000 "iql1" -1.000 "vref0" 1.0 "iqfrz" 0.0 "thld" 0.0 "thld2" 0.0 "tp" 0.01000 "qmax"

[10] Reec_b model has been retired by MVWG and should not be used to model solar PV plants anymore.

0.6000 "qmin" -0.6000 "vmax" 1.2000 "vmin" 0.800000 "kqp" 1.0000 "kqi" 1.00000 "kvp" 1.0000 "kvi" 1.00000 "vref1" 0.0 "tip" 0.01000 "dpmax" 1.00000 "dpmin" -1.00000 "pmax" 1.000000 "pmin" 0.0 "imax" 1.000000 "tpord" 0.01000 "pfflag" 0.000000 "vflag" 1.000000 "qflag" 1.00000 "pflag" 0.0 "pqflag" 0.000000 "vq1" 0.4 "iq1" 0.4 "vq2" 0.9 "iq2" 1.0 "vq3" 1.2 "iq3" 1.0 "vq4" 0.0 "iq4" 0.0 "vp1" 0.4 "ip1" 0.0 "vp2" 0.9 "ip2" 1.0 "vp3" 1.2 "ip3" 1.0 "vp4" 0.0 "ip4" 0.0

repc_a 5 "Test" 0.6 "1 " 2 "GSU_HV" 230.0 : #9 "mvab" 0. "tfltr" 0.02 "kp" 18.00 "ki" 5.00 "tft" 0.00 "tfv" 0.05 "refflg" 1.00 "vfrz" 0.00 "rc" 0.00 "xc" 0.00 "kc" 0.02 "vcmpflg" 0.00"emax" 0.50"emin" -0.50 "dbd" 0.00 "qmax" 0.575 "qmin" -0.575 "kpg" 0.10 "kig" 0.05 "tp" 0.25 "fdbd1" -0.0006 "fdbd2" 0.0006 "femax" 99.00 "femin" -99.00 "pmax" 1.00 "pmin" 0.00 "tlag" 0.10 "ddn" 20.0 "dup" 0.0 "frqflg" 1.00

The parameters shown are for illustration only and do not represent the performance of any particular solar PV plant or equipment.

3.2.3 Scaling for the Solar PV Plant Size and Reactive Capability

Model parameters are expressed in per unit of the generator MVA base (mvab parameter in the regc_a module in the example above) except in repc_b. The specification of MVA base is implementation-dependent. For example, in the PSLF implementation, if the MVA base for those modules is zero, the MVA base entered for the regc module applies to the electrical controls (reec) and plant controller (repc). You may specify a different MVA, if desired.

To scale the dynamic model to the size of the plant, you must adjust the generator MVA base parameter. The active and reactive range are expressed in per unit on the scaled MVA base. Normally, the MVA base is the same as in the power flow model. The reactive range could be wider than the Qmax/Qmin range in the power flow model.

3.2.4 Reactive Power/Voltage Controls Options

The plant-level control module allows for the following reactive power control modes:

- Closed loop voltage regulation (V control) at a user-designated bus with optional line drop compensation, droop response and deadband.
- Closed loop reactive power regulation (Q control) on a user-designated branch, with optional deadband.
- Constant power factor control (PF control) on a user-designated branch active power and power factor. This control function is available in repc_b, not in repc_a.

Different function calls are needed to specify the regulated bus or branch.

In the electrical control module, other reactive control options are available:

- Constant power factor (PF), based on the generator PF in the solved power flow case.

- Constant reactive power based on either the equivalent generator reactive power in the solved power flow case or from the plant controller.
- Proportional reactive current injection during a user-defined voltage-dip event.

Various combinations of plant-level and inverter-level reactive control are possible by setting the right parameters and switches. Section 0 discusses how to select these flags. Table 3 shows a list of control options, and the models and switches that would be involved. The entry "N/A" for vflag indicates that the state of the switch does not affect the indicated control mode. The entry "N/A" for refflag means repc model is not present.

Table 3: Reactive Power Control Options for Large-Scale Solar PV Plant Generic Model

Functionality	Required Models	pfflag	vflag	qflag	refflag
Constant local power factor control	REEC	1	N/A	0	N/A
Constant Q control	REEC	0	N/A	0	N/A
Local V control	REEC	0	0	1	N/A
Local coordinated Q/V control	REEC	0	1	1	N/A
Local coordinated PF/V control	REEC	1	1	1	N/A
Plant-level Q control	REEC + REPC	0	N/A	0	0
Plant-level V control	REEC + REPC	0	N/A	0	1
Plant-level Q control & local coordinated Q/V control	REEC + REPC	0	1	1	0
Plant-level V control & local coordinated Q/V control	REEC + REPC	0	1	1	1
Plant-level PF control	REEC + REPC (_b and above)	0	N/A	0	2

Functionality	Required Models	pfflag	vflag	qflag	refflag
Plant-level PF control & local coordinated Q/V control	REEC + REPC (_b and above)	0	1	1	2

You may model the power factor control at the plant level in repc model or at the inverter level in reec model. If pfflag is set to "1" in reec, the inverter level power factor control is modeled and any plant-level reactive power/voltage control is ignored. The plant-level power factor control should be used if one of the followings is true:

- The power plant controller controls power factor measured at a remote bus other than the inverter terminal bus.
- There are multiple equivalent generators modeled in the same power plant and they are all under the common power factor control.

3.2.5 Active power control options

The plant controller allows a user to specify the active power control options listed below. Table 4 shows the active power control modes as well as the models and parameters involved.

- Constant active power based on the generator output in the solved power flow case.
- Governor droop response with different characteristics for over- and underfrequency conditions, based on frequency deviation at a user-designated bus.

Table 4: Active Power Control Options

Functionality	Required	frqflag	ddn	dup
No governor	REEC	0	0	0
Governor	REEC + REPC	1	>0	0
Governor	REEC + REPC	1	>0	>0

3.2.6 Current Limit Logic

The electrical control module first determines the active and reactive current commands independently according to the active power control option and reactive power control option. Each command is subject to the respective current limit, 0 to *Ipmax* for active current and *Iqmin* to *Iqmax* for reactive current. Then the total current of $\sqrt{Ipcmd^2 + Iqcmd^2}$ is limited by *Imax*. In situations where current limit *Imax* of the equivalent inverter is reached, the user should specify whether active or reactive current takes precedence, by setting the *pqflag* parameter in the REEC module.

3.2.7 Representation of Voltage and Frequency Protection

Frequency and voltage ride-through are needed for transmission-connected solar PV plants. Because they are simplified, the WECC generic models may not be suitable to fully assess compliance with the

voltage and frequency ride-through requirement. Voltage ride-through is engineered as part of the plant design and needs far more sophisticated modeling detail than is possible to capture in a positive-sequence simulation environment. It is best to use a standardized (existing) protection model with voltage and frequency thresholds and time delays to show the minimum disturbance tolerance requirement that applies to the plant. Also, the frequency calculations in a positive-sequence simulation tool is not accurate during or immediately following a fault nearby. It is best to use the frequency protection relay model in a monitor-only mode and always have some time delay (e.g., at least 50 ms) associated with any under- and over-frequency trip settings.[11]

3.2.8 Momentary cessation

Momentary cessation can be characterized using the response shown in Figure 11.

Figure 11: Illustration of Momentary Cessation

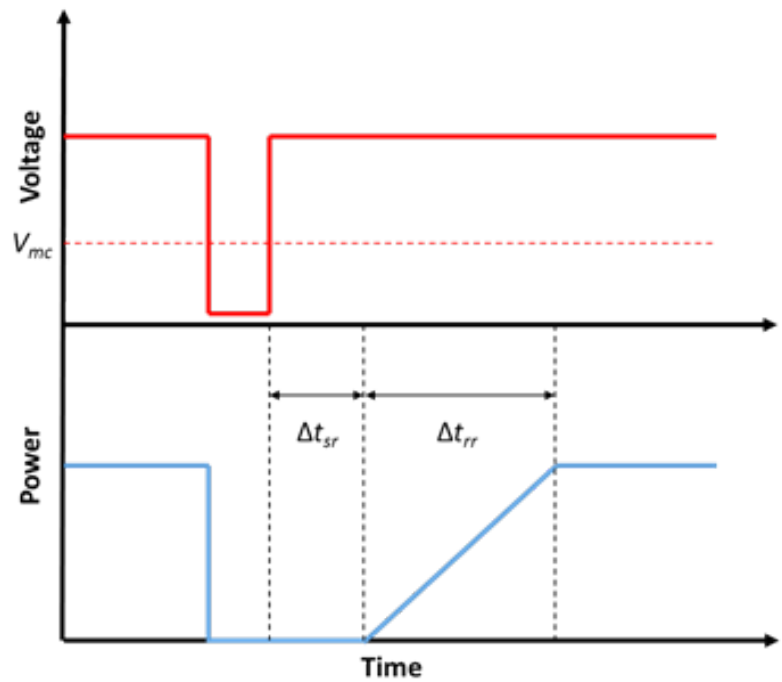

Accurately modeling momentary cessation consists of the following key aspects:

- *Voltage-dependent active and reactive current reduction:* The voltage-dependent current limits (VDL) tables (VDL1 and VDL2) are used to model cessation of both active and reactive current, respectively, when the voltage is below *vblkl* or above *vblkh*.
- *Low Voltage Power Logic Switch*: It is best to set *lvplsw* in REGC to 0 to prevent the generator/converter model from contradicting the VDL1 and VDL2 settings in the REEC model.

[11] https://www.wecc.org/Reliability/WECC_White_Paper_Frequency_062618_Clean_Final.pdf

- *Ramp control of active and reactive current*: Both active and reactive current ramp rates and limits can be modeled in REGC by *rrpwr*, *iqrmax*, and i*qrmin*. Parameter *rrpwr* is the ramp rate limit for active current. It should be set to the active current recovery rate from momentary cessation. *Iqrmax* and *iqrmin* are the upward and downward ramp rate limits on reactive current. The upward ramp limit *iqrmax* is active if the initial reactive power is positive, and the downward ramp limit *qrmin* is active if the initial reactive power is negative.
- *Voltage dip logic*: The parameter *vdip* in REEC must be equal or higher than the low voltage momentary cessation threshold *vblkl* and *vup* must be equal or lower than the high voltage threshold *vblkh* to ensure inverter controls are frozen during the cessation period.
- *Recovery delay*: The delay in recovery of active current[12] can be represented by using a non-zero value for the *thld2* parameter in the REEC_A model if *vdip* is equal to *VMCL* and *vup* is equal to *VMCH*. There is currently no capability to accurately model a delay in reactive current injection in the reec_a model. The reec_d model under development adds parameter *tblk_delay* to delay both active and reactive current injection following a momentary cessation event. This delay activates once the measured terminal voltage comes back within *vblkl* and *vblkh* i.e. following a low voltage (Vt < *vblkl*) or high voltage event (Vt > *vblh*). From the time instant of *vblkl* < Vt < *vblkh*, the active/reactive current command will be held at zero for a period of *tblk_delay* seconds.

3.2.9 Consideration for modeling solar PV and battery storage hybrid plant

If the solar PV and battery storage are ac-coupled (Figure 7), the solar PV and battery storage are modeled explicitly by separate equivalent generators, equivalent pad-mounted transformers and equivalent collector systems in the power flow. Each generator has its set of regc and reec models. It is best to use repc_b as the master plant controller to coordinate electrical controls between the solar PV and battery storage.

If the solar PV and battery storage are dc-coupled (Figure 8), one equivalent generator represents the inverters for both solar PV and battery storage. One set of regc, reec and repc models is needed for the equivalent generator. The electrical control model suitable for the battery storage could always be used for this type of inverters. In case the battery does not charge from the grid, one may choose to use the electrical control model suitable for the solar PV instead of battery storage to represent the inverters with dc-coupled solar PV and battery storage.

[12] There is currently no capability to accurately model a delay in reactive current injection in the reec_a model. The reec_d model uses parameter thld to delay reactive current injection following a voltage dip event.

3.3 WECC Generic Model for Distributed and Small Solar PV Plants

The generic model DER_A is best to represent distribution-connected small solar PV plants or multiple solar PV plants aggregated at a high voltage bus that is represented in power flow. The DER_A model is used either as a stand-alone model for in-front-of-the-meter distributed solar PV plants or as plug-in in the composite load model for behind-the-meter solar PV resources. The DER_A model is much simpler than the modules discussed in Section 4.2 and gives a basic set of control options. Please refer to the DER_A model specification[13].

PVD1 models were used before the approval of DER_A model and WECC still accepts them. For newly interconnecting solar PV plants at the distribution system, DER_A must be used.

[13] https://www.wecc.org/Reliability/DER_A_Final_061919.pdf

4 Model Parameterization and Validation

The overarching goal of the model validation process is to verify that the results of time domain simulation agree with measured data and hence, are consistent with actual system performance. In commercial software tools, the power system is simulated by integrating the differential equations of the dynamic models used to represent the system equipment. Many dynamic model inputs are values provided by the solution of the algebraic power flow equations. As such, computational simulation of the power system is dependent upon the fidelity of both the power flow and dynamic models. For central station solar PV plants, the power flow representation is dictated by physics. All the necessary parameters are known or can be calculated directly with a high degree of certainty. Hence, the focus of this section will be on configuring the structure and selecting the parameter values of dynamic models for central station solar PV plants.

4.1 Data Collection

The types of data useful for model validation of solar PV plants can be divided into two categories. The first corresponds to the system's response to repeatable tests, and the second corresponds to the system's response to spontaneously occurring disturbances. Repeatable tests, such as performing a step-test with a switched capacitor, can be an effective method of characterizing a plant's response. The controlled nature of the test makes it easier to distinguish the plant's response from noise in the measurement channel. However, data collected during actual grid disturbances help prove the accuracy of the model when subject to uncontrolled perturbations in a way that tests cannot. The intent is for the modeled and measured output to agree for contingencies that occur in the field. Note that for small disturbance verification, only those parameters that affect small disturbance behavior will be verified. Large disturbance behavior invokes different model controls blocks and settings, and therefore large disturbances are needed to truly verify these parameters using measurement data.

To isolate the behavior of the typical inverter in the plant, measurements may be taken at either the terminals of the inverter or the inverter pad-mounted transformer. For plant-level model validation purposes, measurements may be taken at either high or low side of the substation transformer. In the context of transmission system dynamics studies, the bandwidth of interest for the equipment models spans a range from about 0 to 5 Hz. Using a multiple of the Nyquist rate as a guide, the sample rate of measurements used for model validation should ideally be 30 Hz or greater. For phasor measurement units (PMUs), a sample rate of 60 Hz is preferred. In modern implementations, PMU measurements are typically taken at both the primary and secondary of the substation transformer(s). Digital Fault Recorders (DFRs) and PMU-capable DFRs can capture valuable data for dynamic model validation as well.

4.2 Defining the Mode of Operation

With the generic models developed by the REMTF, a central station solar PV plant can be configured in over 30 unique modes of operation. Because there are myriad ways the models can be configured, selecting the proper model structure is a vital first step in the parameter estimation process. Each unique model configuration corresponds to a particular control scheme. Table 3 and Table 4 in the previous section give a breakdown of commonly used reactive and real power control options. Models should be developed, configured, and tested to match the actual settings and equipment response installed in the field.

4.2.1 Setting the REPC Model Flags

The first step is to select the proper REPC module. REPC_B or a higher version module should be used if one of the following is true:

- The plant-level controller controls multiple devices represented explicitly in the power flow model.
- The plant operates in constant power factor mode for reactive control and the power factor reference is at a remote bus from the inverter terminal.

The MVA base for REPC_B model is the system MVA base. Parameters obtained on the plant MVA base need to be converted to the system MVA base.

The plant controller module, REPC, has three control flags. The reference flag, **refflag**, selects either plant-level voltage, reactive power control or power factor control. If plant-level voltage control is selected, the voltage compensation flag, **vcmpflag**, selects either voltage droop or line drop compensation. The real power reference flag, **frqflag**, determines whether the real power output of the plant is modulated to support system frequency, to maintain a constant plant-level real power output, or both.

1. Does the plant have a plant-level controller?
   - If yes, move on to Step 2. Otherwise, do not include the REPC module in the dynamic model and skip ahead to 4.2.2.
2. What plant-level volt/VAr control is in place?
   - If plant-level voltage control, set refflag = 1.
   - If plant-level reactive power control, set refflag = 0.
   - If plant-level power factor control, set refflag = 2. [14]
3. If plant-level voltage control is implemented, does it use line drop compensation?
   - If yes, set vcmpflag = 1. If voltage droop compensation is in place instead, set vcmpflag = 0.

[14] This is available in REPC_B and future REPC models.

- With vcmpflag = 1, if the measured voltage is not compensated, set the compensation resistance and reactance to zero, rc = 0 and xc = 0.

4. Does the plant modulate its real power output to support system frequency or maintain a constant plant-level real power output?
   - If yes, set frqflag = 1. Otherwise, set frqflag = 0.
   - With frqflag = 1,
     - If the plant responds to high frequency by reducing real power output, set ddn to the reciprocal of actual plant downward frequency droop; otherwise, set ddn = 0.
     - If the plant responds to low frequency by increasing real power output, set dup to the reciprocal of actual plant upward frequency droop; otherwise, set dup = 0.

4.2.2 Setting the REEC Model Flags

The renewable energy electrical control model for solar PV systems, REEC, has four flags which allow the user to fine-tune its control structure and select real or reactive power priority. The combination of the power factor (**pfflag**), voltage (**vflag**), and reactive power (**qflag**) control flags dictates the reactive power control scheme of the plant.

The purpose of the current limit logic is to allow the plant to properly distribute its current capacity upon saturation. Priority is given to either the active or reactive current command depending on the value of the current limit logic priority flag (**pqflag**). The first priority command is bounded only by the current rating of the converter. Hence, the second priority command is bounded by whatever capacity is leftover after generating the first priority command.

The instructions for how to set the REEC module flags are broken down into two sections, one for plants with strictly local control (i.e., no plant controller) and one for plants with plant-level control. Be careful to follow the correct procedure for the plant being modeled.

4.2.2.1 Strictly Local Control—No REPC Module

1. Does the plant regulate its output to keep a constant local power factor?
   - If yes, set pfflag = 1.
   - If no, set pfflag = 0.
2. Does the plant compute a reactive current command by dividing the reactive power reference by a voltage (constant reactive power control or constant power factor control)?
   - If yes, set qflag = 0. Skip to Step 5.
3. Does the plant regulate voltage at the terminal bus (local voltage control)?
   - If yes, set vflag = 0 and qflag = 1. Skip to Step 5.
4. Does the plant operate in local coordinated Q/V or PF/V control using the series PI loops depicted in Figure 23 in the Appendix?

- If yes, set vflag = 1 and qflag = 1.

5. Does the plant operate in real or reactive power priority mode?
   - For real power priority, set pqflag = 1. For reactive power priority, set pqflag = 0.

The next section describes how to set the REEC parameter flags for central station solar PV plants with plant-level control (i.e., when the REPC module is included). This procedure is different because the mode of operation and flag settings must be compatible across the REEC and REPC modules.

4.2.2.2 Plant-Level Control—Model Includes REPC Module

1. Set pfflag = 0. Local power factor control should not be used with the plant controller module.
2. Does the Qref Volt/VAr output of the plant controller correspond to a voltage reference?
   - If yes, set vflag = 0 and qflag = 1. Skip to Step 6.
3. Does the Qref Volt/VAr output of the plant controller correspond to a reactive power reference?
   - If yes, set vflag = 1.
4. Does the plant employ local coordinated Q/V control using the series PI loops depicted in Figure 23 in the Appendix?
   - If yes, set qflag = 1. Skip to Step 6.
5. Does the plant compute a reactive current command by dividing the reactive power reference by a voltage?
   - If yes, set qflag = 0. In this configuration, the series PI loops depicted in Figure 23 are bypassed.
6. Does the plant operate in real or reactive power priority mode?
   - For real power priority, set pqflag = 1. For reactive power priority, set pqflag = 0.

The flow charts below show the procedures between REPC and REEC modules.

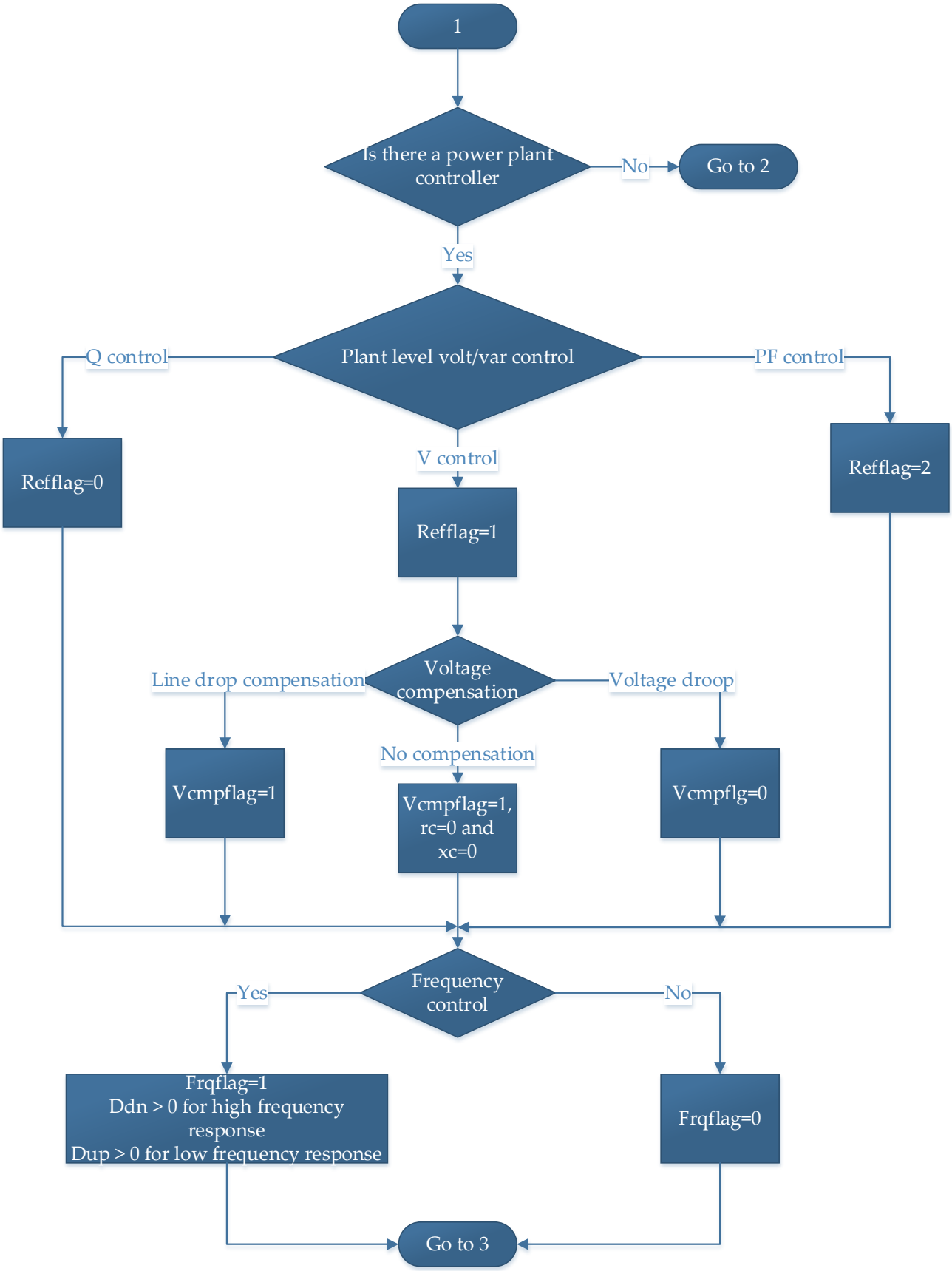
1
Is there a power plant controller
No
Go to 2
Yes
Plant level volt/var control
Q control
PF control
V control
Refflag=0
Refflag=1
Refflag=2
Voltage compensation
Line drop compensation
Voltage droop
No compensation
Vcmpflag=1
Vcmpflag=1, rc=0 and xc=0
Vcmpflg=0
Frequency control
Yes
No
Frqflag=1
Ddn > 0 for high frequency response
Dup > 0 for low frequency response
Frqflag=0
Go to 3

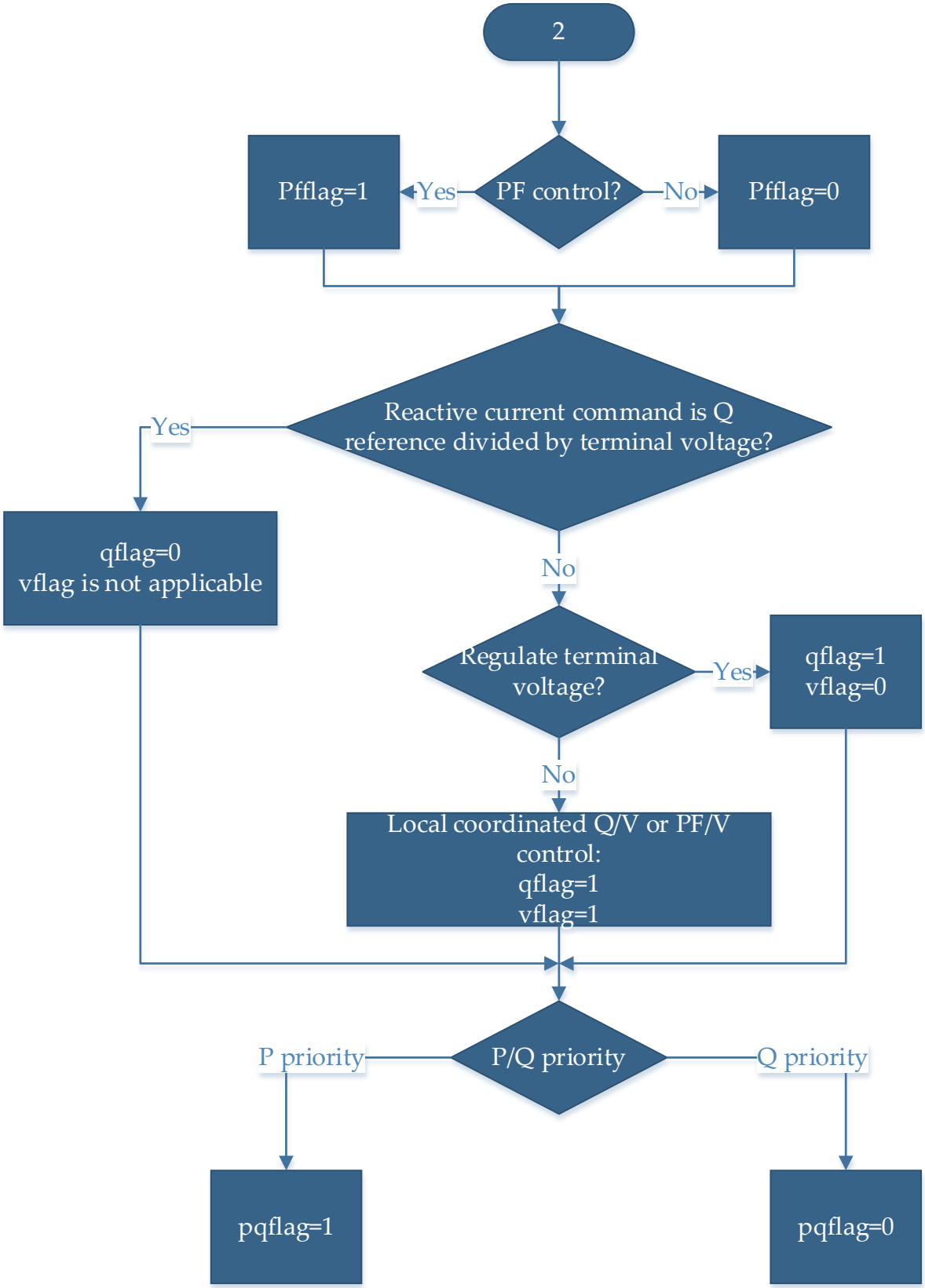
2
PF control?
Yes
Pfflag=1
No
Pfflag=0
Reactive current command is Q reference divided by terminal voltage?
Yes
qflag=0
vflag is not applicable
No
Regulate terminal voltage?
Yes
qflag=1
vflag=0
No
Local coordinated Q/V or PF/V control:
qflag=1
vflag=1
P/Q priority
P priority
Q priority
pqflag=1
pqflag=0

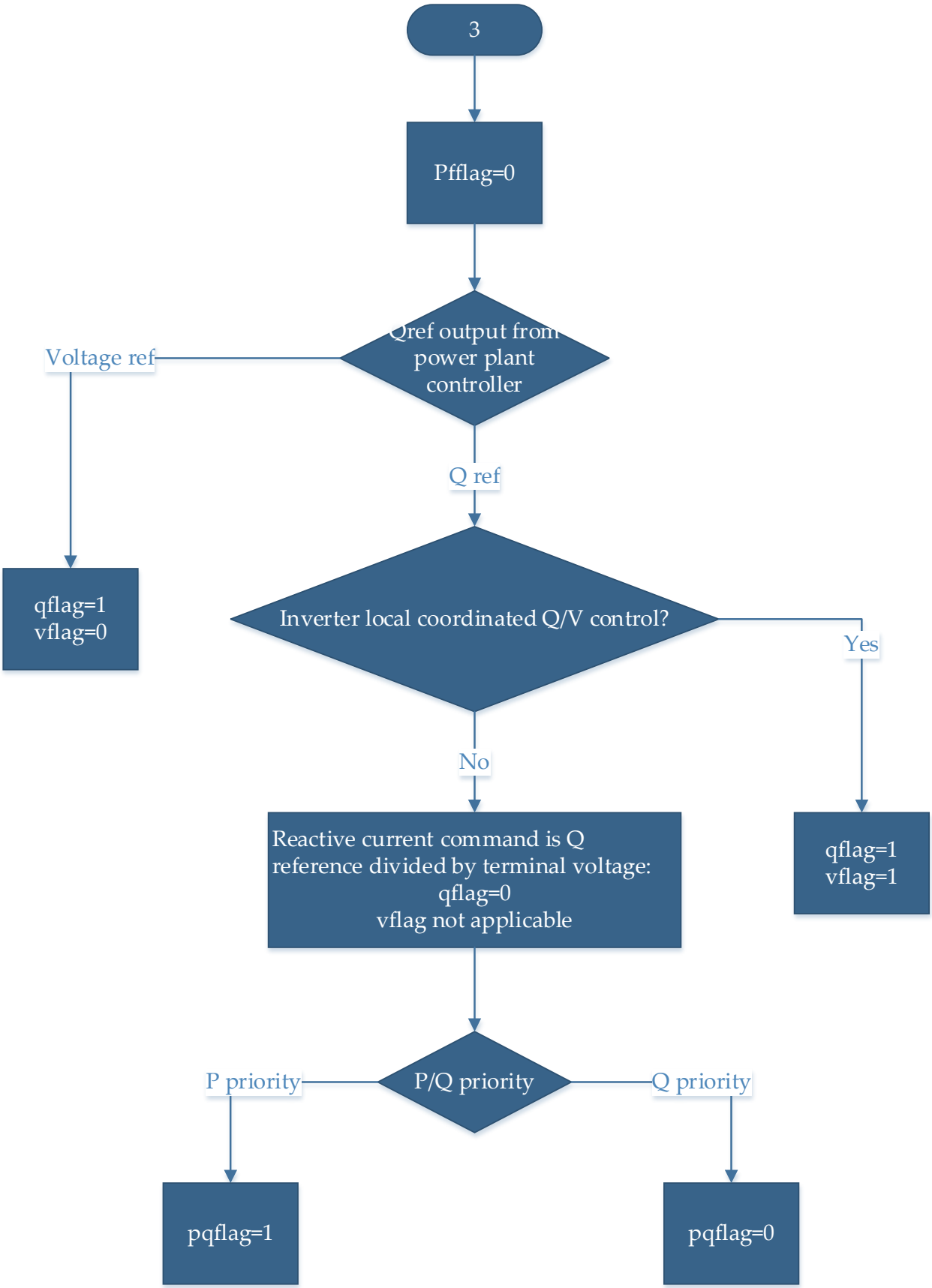
3
Pfflag=0
Qref output from power plant controller
Voltage ref
Q ref
qflag=1
vflag=0
Inverter local coordinated Q/V control?
Yes
No
Reactive current command is Q reference divided by terminal voltage:
qflag=0
vflag not applicable
qflag=1
vflag=1
P/Q priority
P priority
Q priority
pqflag=1
pqflag=0

4.2.3 Setting the REGC Model Flags

The generator converter module, REGC, has one flag which enables or disables the Low-Voltage Power Logic (LVPL) feature. The **lvplsw** flag set to 1, together with **brkpt**, **zerox** and **lvpl1**, defines an active current limit reducing from lvpl1 to 0 between voltage brkpt and zerox.

Figure 12: Low Voltage Power Logic

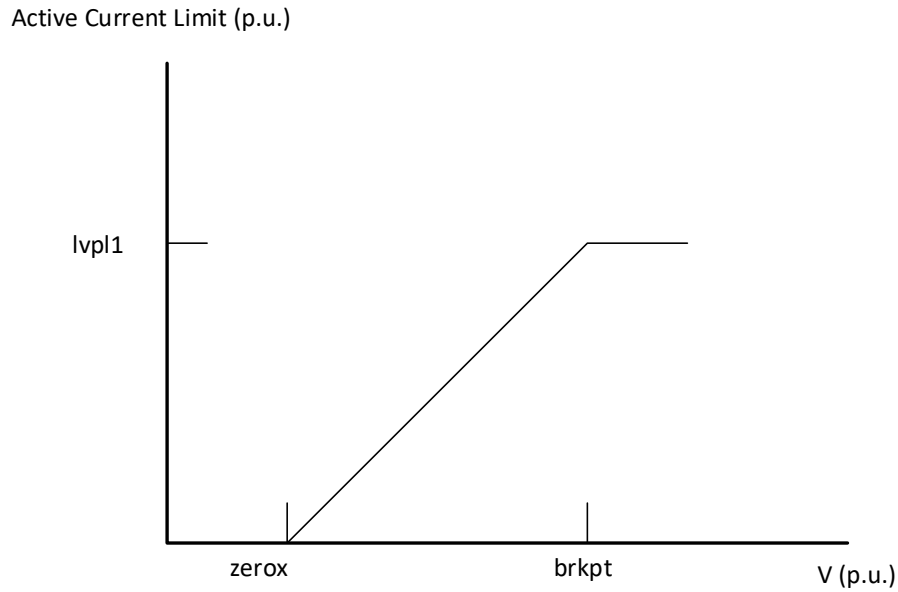

1. Are both active and reactive current limits voltage-dependent?
   - If yes, set **lvplsw** = 0 and use VDL blocks in REEC model for the voltage-dependent current limits.
   - If no, go to Step 2.
2. Is the active current limit voltage-dependent as illustrated in Figure 12?
   - If yes, set **lvplsw** = 1. Otherwise, set **lvplsw** = 0 and the VDL2 block in REEC model may be used to represent piece-wise linear dependence of active current limit on the voltage.

The VDL1 and VDL2 blocks in REEC model have better modeling capability to represent the voltage-dependent current limit. The REGC_B and REGC_C models have ended the use of the low-voltage power logic.

4.3 Valid Model Parameter Flag Combinations

After setting the model parameter flags as described in this section, check to ensure that the selected flag combination corresponds to a valid mode of operation.

4.3.1 Strictly Local Control—No REPC Module

This section discusses the possible flag combinations for plants with strictly local control. The distinguishing feature of strictly local control is that the plant has no plant-level controller. Hence, the overall dynamic model consists only of the REGC and REEC modules. Table 5 lists the possible flag combinations for plants with strictly local control and shows whether each combination is valid or invalid. Only valid flag combinations are permissible for model data submissions.

The choice of real or reactive power priority via the **pqflag** does not influence whether a particular flag combination corresponds to a valid control mode. Hence, the **pqflag** may be set to either 0 or 1 for any case.

Table 5: List of Flag Combinations for Local Control

REEC			Notes
pfflag	vflag	qflag	No.
0	0	0	1
0	0	1	2
0	1	0	3
0	1	1	4
1	0	0	5
1	0	1	6
1	1	0	7
1	1	1	8

Key
Valid
Invalid

Notes:

1. Valid—Constant reactive power control (equivalent to Combination #3).
2. Valid—Local voltage control.
3. Valid—Constant reactive power control (equivalent to Combination #1).
4. Valid—Local coordinated Q/V control.
5. Valid—Constant local power factor control (equivalent to Combination #7).
6. Invalid—Local power factor control is incompatible with the voltage regulation PI loops.
7. Valid—Constant local power factor control (equivalent to Combination #5).
8. Valid—Local coordinated PF/V control.

4.3.2 Plant- Level Control—Model Includes REPC Module

This section discusses the possible flag combinations for plant-level control. Only valid flag combinations are permissible for model data submissions. The overall plant model comprises three modules: REGC, REEC, and REPC. The plant controller module contains three parameter flags: **refflag**, **vcmpflag,** and **frqflag**. A brief description of the REPC flags follows:

refflag — Determines whether the plant-level Volt/VAr control loop regulates voltage (=1) or reactive power (=0)

vcmpflag — Determines whether the plant controller employs line drop compensation (=1) or voltage droop (=0) when **refflag** = 1

frqflag — Determines whether the real power control functionality of the plant controller is enabled (=1) or disabled (=0)

The position of the voltage compensation flag, **vcmpflag**, only has an impact when the plant-level Volt/VAr control loop is regulating voltage (i.e., when **refflag** = 1). Although the value of **vcmpflag** does not affect the validity of a flag combination, take care to coordinate its setting with the plant's mode of operation and the REPC model invocation.

Table 6: List of Flag Combinations for Plant and Local Control

REEC			REPC	Notes
pfflag	vflag	qflag	refflag	No.
0	0	0	0	1
0	0	0	1	2
0	0	1	0	3
0	0	1	1	4
0	1	0	0	5
0	1	0	1	6
0	1	1	0	7
0	1	1	1	8
1	0	0	0	9
1	0	0	1	10
1	0	1	0	11
1	0	1	1	12
1	1	0	0	13
1	1	0	1	14
1	1	1	0	15
1	1	1	1	16
0	0	0	2	17
0	1	0	2	18
0	1	1	2	19

Key
Valid
Invalid

Notes:

1. Valid—Plant-level reactive power control (equivalent to Combination #5)
2. Valid—Plant-level voltage control (equivalent to Combination #6).
3. Invalid—Plant-level reactive power control not compatible with local voltage control.
4. Valid—Plant-level voltage control and local voltage control.
5. Valid—Plant-level reactive power control (equivalent to Combination #1)
6. Valid—Plant-level voltage control (equivalent to Combination #2).

7. Valid—Plant-level reactive power control and local coordinated Q/V.
8. Valid—Plant-level voltage control and local coordinated Q/V control.
9. Invalid—REPC is not used with pfflag=1.
10. Invalid—REPC is not used with pfflag=1.
11. Invalid—REPC is not used with pfflag=1.
12. Invalid—REPC is not used with pfflag=1.
13. Invalid—REPC is not used with pfflag=1.
14. Invalid—REPC is not used with pfflag=1.
15. Invalid—REPC is not used with pfflag=1.
16. Invalid—REPC is not used with pfflag=1.
17. Valid—Plant-level power factor control (equivalent to Combination #18).
18. Valid—Plant-level power factor control (equivalent to Combination #17).
19. Valid—Plant-level power factor control and local coordinated Q/V.

Other combination of flags not listed above are invalid.

4.4 Dynamic Model Invocation Considerations

This section discusses important things to consider when selecting the correct dynamic model invocation for a solar PV plant. A dynamic model invocation is an entry or series of entries in a dynamic data file that specifies which modules will be employed to represent a plant and what their respective parameters are. Model invocation conventions vary between software platforms, so consult the user manual for guidance.

The precise details of the model invocation can affect the operation of the modules. For example, the way the plant controller module is invoked specifies which bus is regulated and which branch is monitored. It is crucial to consider not only how the parameters of the REPC module are populated, but how the model itself is invoked.

4.4.1 REPC Module Invocation Considerations

In the REPC module invocation, the user specifies which bus is regulated by the plant. In addition to declaring which bus is regulated, the user has the option of specifying a monitored branch. For central station solar PV plants, this branch is selected so it reflects the total output of the plant as measured on either side of the collector system equivalent.

The **Ibranch**, **Pbranch**, and **Qbranch** inputs to REPC seen in Figure 26 in the Appendix are determined from the flows on this branch. So, to model real or reactive power control at the plant level, a monitored branch must be specified. Notice that for plant-level voltage control, line drop compensation is performed using the current magnitude on this branch and the user-specified compensation resistance and reactance.

Key Points

- Define the terminal bus to which the equivalent generator/converter is connected.
- Define the bus that is regulated by the plant, if other than the terminal bus.
- Define the monitored branch from which the **Ibranch**, **Pbranch**, and **Qbranch** inputs to REPC are derived.

4.5 Populating Model Parameters

Once the field tuning of the controls is done, most of parameters in the generic models are fixed and can be taken from the Original Equipment Manufacturer or from the actual controller settings. There are some parameters to be calibrated from the field test and the measured data as the control block in the generic model may not have a direct association with an actual controller.

Before the generic model parameters are populated, it is essential to complete three key prerequisites:

- Create a power flow representation of the plant as described in Section 1 of this document.
- Define the mode of operation for the plant as discussed in Sections 0 and 4.3.
- Determine the correct dynamic model invocation for the plant based on the mode of operation, the regulated bus, and the monitored branch as described in Section 4.4.

Unless these three prerequisites are completed, the correct parameter values will still not give the right model behavior.

Once the power flow representation for the plant and the proper dynamic model invocation have been set, it is time to begin populating the parameters of the dynamic model.

A plant's mode of operation determines the model structure and which parameters have an impact on its model behavior. Most of the parameters are fixed, such as control deadbands, time constants, error limit, ramp rate, etc. The tunable parameters are usually control gains. There are eleven control gains in the three renewable energy modules. Table 7 categorizes the tunable parameters according to whether they affect real or reactive power. The columns of the table show whether a parameter belongs to the electrical control module (REEC) or the plant controller (REPC). Few implementations need all these gains to be tuned. For example, the value of **kqv** can be set from the inverter control implementation. If the voltage proportional control under abnormal voltage condition is not in place, **kqv** should be 0; otherwise, the value from the field control tuning should be used. **kqp** and **kqi** are tuned if qflag is 1. **kvp** and **kvi** are tuned if vflag is 1. The values of **ddn** and **dup** are based on the field implementation and would not need parameter tuning.

Table 7: Tunable Control Gains

Real Power		Reactive Power	
REEC	**REPC**	**REEC**	**REPC**
-	kpg	kqv	kp
-	kig	kqp	ki
-	-	kqi	-
-	-	kvp	-
-	-	kvi	-

4.5.1 Dynamic Model Parameter Sensitivity

In most circumstances, the control loops which affect a plant's real and reactive power response are independent of one another. As a result, most tunable parameters directly influence either the real or reactive current command, but not both. An example of where this clear delineation breaks down is when the converter's output approaches its current rating. Under saturation, the REEC current limit logic engages and the active and reactive current commands are allocated according to the limit scheme and the priority selection made with **pqflag**. However, the real and reactive power responses can be tuned independently.

A plant's dynamic response can be divided into four components, which characterize its real and reactive power response to voltage and frequency variations respectively. The following section aims to explain the key factors which influence each of those four elements. Along the way, we will try to highlight the role of important model parameters.

4.5.2 Real Power Response to Voltage Variations

In the REEC electrical control module, the active current command is generated by dividing the real power reference by the terminal voltage of the equivalent converter. This operation will cause the real power response of the plant to be sensitive to voltage. The ability to tune this response within REEC is limited. The key factors influencing a plant's real power response to voltage variations are the current limit logic in the REEC module and low voltage power logic in the REGC module. These features should be set according to how a plant's active current output is limited in response to terminal voltage variations.

Key parameters: **imax, VDL2** (REEC)

lvplsw, zerox, brkpt, lvpl1, lvpnt0, lvpnt1 (REGC)

4.5.3 Real Power Response to Frequency Variations

Many of the central station solar PV plants have the capability to control the active power output to regulate frequency. This capability is required by FERC Order 842 on all the newly interconnecting solar PV plants. However, the solar PV plants typically do not preserve headroom for upward frequency regulation. The control is modeled in REPC module. Three of the key parameters, **frqflag**, **ddn** and **dup**, are determined by the control implementation. Two control gains, **kpg** and **kig**, must be estimated to match the measurement data.

Key parameters: **frqflag, kpg, kig, ddn, dup** (REPC)

4.5.4 Reactive Power Response to Voltage Variations

The plant-level reactive power control loop and the majority of the REEC electrical control module are dedicated to shaping a plant's reactive power response to system voltage variations.

Everything discussed in Sections 0 to 4.4 about a plant's mode of operation and its dynamic model invocation will affect the relationship between reactive power and voltage.

Key parameters: **kp, ki** (REPC)

kqv, kqp, kqi, kvp, kvi, vdip, vup, qmax, qmin, imax, VDL1 (REEC)

4.5.5 Reactive Power Response to Frequency Variations

Solar PV inverters are designed so their reactive power output does not react to system frequency variations. Furthermore, there is no supplemental control loop which modulates reactive power in response to frequency error. Hence, there are no key control features or parameters that affect this element of a plant's response.

Key parameters: Not applicable

4.5.6 Properly Coordinated Plant Control and Inverter Control

Most controls represented by the generic models is about reactive power control. The plant control loop, inverter PI control loops and the inverter proportional control must be coordinated through field tuning and accurately reflected in the models. In addition to the key parameters above, the following parameters are important to modeling the control coordination.

Key parameters: **vfrz, qmax, qmin, kw** (REPC)

vdip, vup, qmax, qmin (REEC)

4.5.7 Parameter Estimation Example

This section presents an example of a successful parameter estimation procedure. This case was built using simulated data for purposes of demonstration. As such, the model data and plant response are not associated with any specific solar PV plant. The necessary preliminaries discussed in Section 4.5 were done before starting the parameter estimation procedure.

Figure 13 presents the one-line diagram corresponding to the plant's power flow representation. The plant was set to control voltage at the plant level and employ local coordinated Q/V control. Hence, both interior PI loops of the REEC module were used.

Figure 13: One-line Diagram for the Parameter Estimation Example

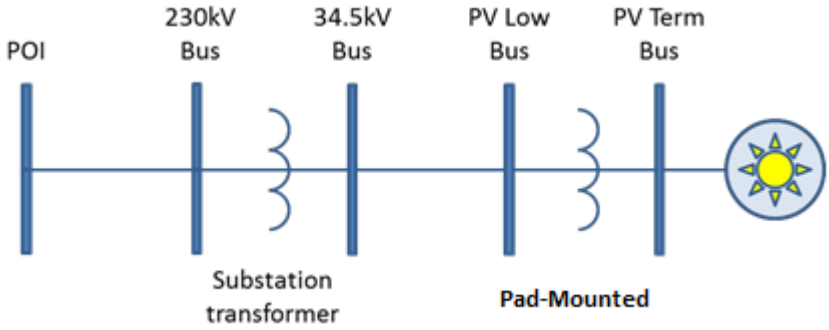

The aim of the procedure described here was to characterize the plant's real and reactive power response to system voltage variations. A six-cycle fault was simulated on the grid side using the playback feature in PSLF. Although this data was simulated, field measurements can be played in using this approach as well. During the fault, the voltage at the POI was depressed to about 50% of its pre-disturbance level. Data was recorded to simulate PMU measurements taken on the primary and secondary of the substation transformer. Figure 14 shows the voltage measurements taken on the primary (high-voltage side) of the substation transformer during the fault. These signals served as the inputs to the solar PV plant model. Figure 15 shows the real and reactive power output of the plant as measured at the high side of the substation transformer. These signals served as the outputs. The tunable parameters of the model were adjusted such that the output matched the measurements displayed in Figure 15 for the inputs displayed in Figure 14.

Figure 14: Inputs—Station Voltage Measurements

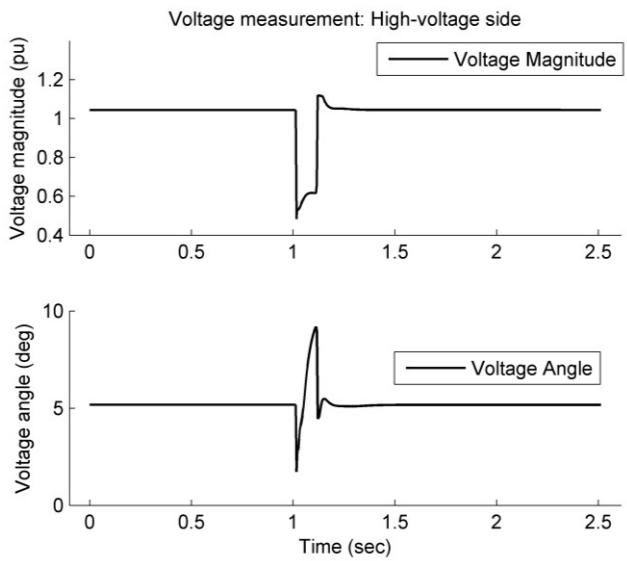

Figure 15: Outputs—Plant Real and Reactive Power

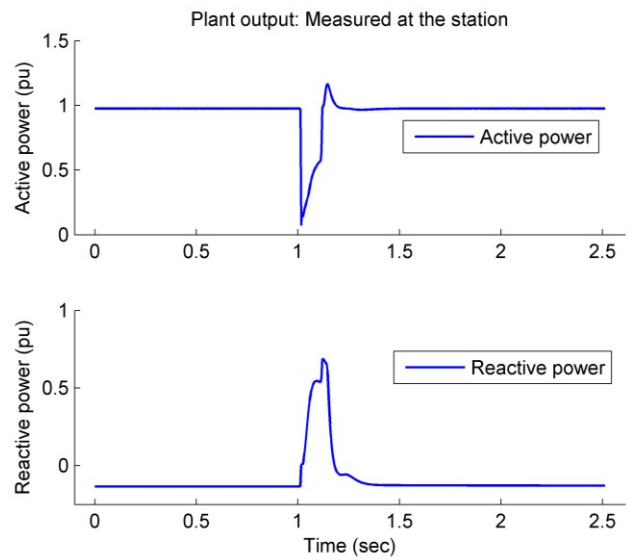

For this plant, the selected mode of operation was plant-level voltage control with local coordinated Q/V control. The parameter flag combination for this control mode, as shown in Table 3, is:

pfflag = 0, **vflag** = 1, **qflag** = 1, **refflag** = 1

Because this is a control mode that needs a plant controller, the set of the control gains to be estimated include kp, ki, kqp, kqi, kvp, and kvi.

For the purposes of the example, the actual parameters used to generate the simulated data depicted in Figure 15 were effectively erased. That is, the parameter estimation routine was stripped of all information about their values. Although the tunable parameters of the dynamic model were unknown, it was necessary to make a first guess about their values to seed the parameter estimation routine. The first guess for the unknown parameters was used to produce the preliminary model output depicted in Figure 16. In contrast to Figure 15 which shows the plant output, Figure 16 shows the real and reactive power output measured at the solar PV low voltage bus. These signals are the output of the equivalent generator/converter. Notice that the modeled response does not match the measured data particularly well for the first guess. This is to be expected because the control gains were not known with certainty.

Figure 16: First Guess Output Comparison

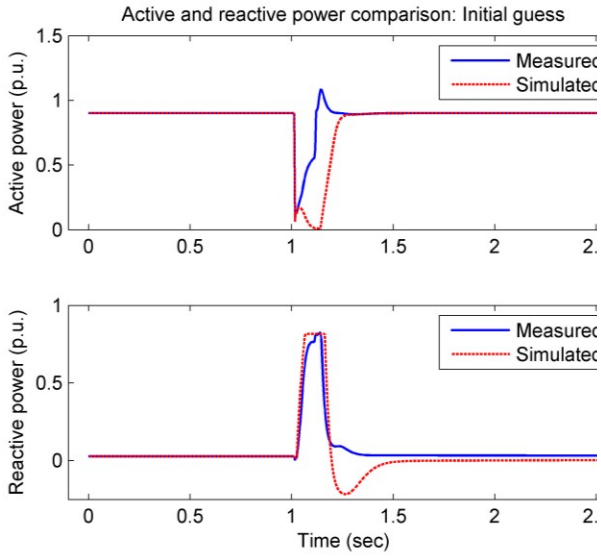

Figure 17. Optimized Parameter Output Comparison

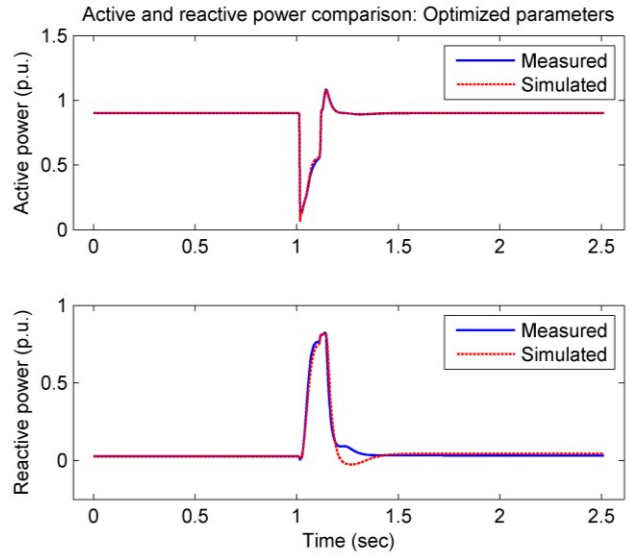

For this example, the parameters were estimated using an optimization algorithm called the Nelder-Mead method. The algorithm yielded a set of estimated (or optimized) parameters and the modeled plant output generated with those parameters. Table 8 shows the results of the parameter-estimation routine. The table shows the first guess at the tunable parameter values, the actual values used to generate the data, and the estimated (or optimized) parameter values. Because this example was for demonstration purposes, the actual parameter values are known with certainty. This lets us assess how well the actual and estimated parameters agree. For real-world scenarios, there is no master parameter set that represents the "true" solution.

Table 8: Initial, actual, and optimized model parameters.

Model	Param.	Initial	Actual	Estimate
REPC	Kp	15.0	10.0	**10.9**
	Ki	1.0	5.0	**4.3**
REEC	Kqp	0.0	0.1	**0.0**
	Kqi	0.0	0.1	**0.0**
	Kvp	12.0	5.0	**4.1**
	Kvi	**2.0**	**1.0**	**1.2**

The extent to which the modeled output matches the measured data in Figure 17 is representative of what is achievable using field data. The modeled output does not show any significant bias error, and it tracks the data well during the disturbance. While the aim of a parameter estimation routine is to make the modeled output match measured data as well as possible, it is unrealistic to expect an exact fit. If the modeled output matched the measured data exactly, that would be a sign of overfitting. The intention is to track the physical response of the plant and disregard the process noise.

In the case of model validation for solar PV plants, the criterion by which parameterizations are judged is difficult to codify. Mathematical norms, such as the sum of squared error or the Euclidean norm, can serve as useful metrics for describing how well the modeled output matches measured data. That said, it is the opinion of the REMTF that it is counter-productive to try to reduce the model validation criteria to a rigid mathematical definition. Model validation for power systems is as much an art as a science, and engineering judgment plays a significant role in the process. As such, this document does not prescribe any tests of goodness of fit which neatly separate "good" model parameter sets from "bad."

4.5.8 Importance of Power Flow Representation

The importance of a plant's power flow representation was discussed in Section 1. To elaborate on the subject, the figures below illustrate that a plant's response is based on both its power flow representation and its dynamic model. Figure 18 shows the case in which the dynamic model parameters and power flow representation match the master data precisely. Figure 19 shows the case in which the dynamic model parameters match exactly, but the impedance of the collector system equivalent is incorrect. This type of result could lead one to believe that the dynamic model parameters are incorrect, though, it is the power flow representation that is deficient.

Figure 18: Exact Fit Output Comparison

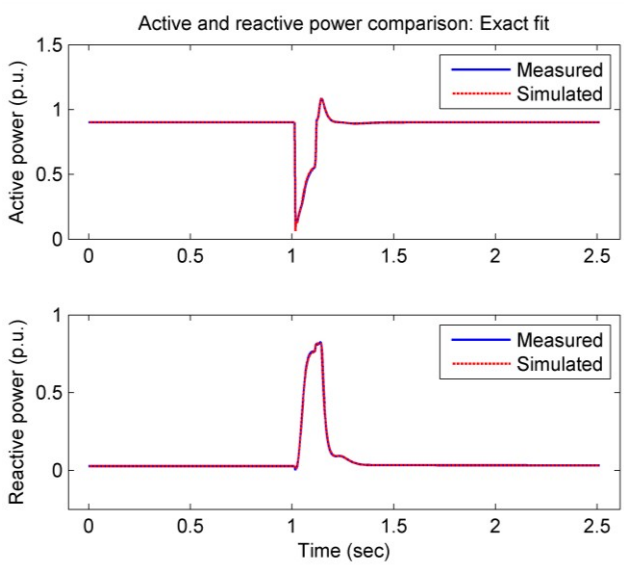

Figure 19: Bad Power Flow Model Output Comparison

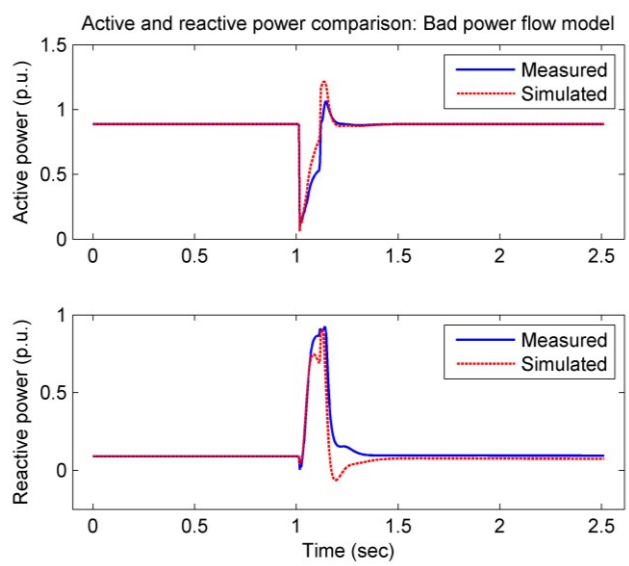

4.5.9 Model Performance for Various Disturbances

A satisfactory solar PV plant model produces simulated output that matches measured data for an array of different disturbances and power output levels, not just a select data set used to train the model. A good practice is to reserve certain data sets and use them for model evaluation only, meaning they are not used to tune the model parameters. When performing model validation using

multiple data sets, one must confirm that the plant's mode of operation and control settings are consistent across the different cases.

5 Conclusion

This guideline is intended to clarify the goals and requirements of the model validation process rather than to serve as a rigid procedure. There are many ways to arrive at a satisfactory model parameterization for a central station solar PV plant; however, all successful approaches have certain characteristics in common. Modeling a central station solar PV plant begins with setting up an accurate power flow representation of the plant. Without one, it is difficult to accurately assess the performance of the dynamic model. Next, the plant's mode of operation is defined and the corresponding dynamic model invocation is specified. The generic models developed by the REMTF possess tremendous flexibility, and the control structure must be configured in a way that is consistent across the various modules. Because the dynamic model for a solar PV plant contains between 45 and 75 parameters, it is critical to minimize the set of tunable parameters by holding fixed as many of them as possible. Only then is it appropriate to adjust the parameters of the dynamic model to bring the modeled and measured output into agreement. Irrespective of the method used to estimate the unknown parameters, sound engineering judgment is needed to find a satisfactory dynamic model representation.

6 Appendix

6.1 Short- Circuit Ratio Fundamentals

The ac system strength at a central station solar PV plant's point of interconnection (POI) has a significant impact on the interaction between the plant and the grid. For inverter- coupled renewable generation plants, a simple measure of ac system strength is the Short-Circuit Ratio (SCR). One part of this measure is the three-phase apparent power delivered to a short circuit at the POI.[15]. This quantity is given by,

$$SC_{sys}(MVA) \stackrel{\text{def}}{=} ac\ system\ short\ circuit\ MVA$$

$$V_{ac} \stackrel{\text{def}}{=} ac\ voltage\ at\ plant\ rated\ power$$

$$Z_{th} \stackrel{\text{def}}{=} ac\ system\ Thevenin\ equiv.\ impedance$$

$$SC_{sys}(MVA) = \frac{V_{ac}^2}{Z_{th}} \qquad \text{(Eq. 1)}$$

The short circuit MVA is an indicator of the Thevenin equivalent impedance looking into the grid at the POI[16]. The short-circuit ratio is calculated by dividing the short-circuit MVA, defined in (Eq. 1), by the plant's rated (maximum) real power output. Voltages on systems with a low SCR are more sensitive to fluctuations in reactive power than those with a high SCR. Plants with a low SCR (<3) tend to experience voltage stability problems, including, but not limited to: high dynamic over-voltages, harmonic resonance, and voltage flicker. Reactive compensation in the form of synchronous condensers or static VAr compensators (SVC) can help alleviate some of these problems.

$$P_{rated}\,(MW) \stackrel{\text{def}}{=} plant\ max\ MW\ output$$

$$SCR = \frac{SC_{sys}\ (MVA)}{P_{rated}(MW)} \qquad \text{(Eq. 2)}$$

The generic modelsdeveloped by the WECC REMTF and discussed in this document are applicable for systems with a short circuit ratio of 3 and higher at the point of interconnection (POI). These generic models are not intended to represent plants with very low short-circuit levels. In that case, detailed, vendor-specific models may be needed.

The SCR as defined above cannot be easily applied to a situation when multiple inverter-based resources are connected electrically close. It can lead to overly optimistic results. Several methods have been proposed to estimate system strength for groups of inverter-based resource connected electrically

[15] North American Electric Reliability Corporation (NERC), "Interconnection Requirements for Variable Generation," Special Assessment, September 2012.

[16] P. Kundur, Power System Stability and Control, pp. 528-533, New York: McGraw-Hill, 1994.

close. For more information, refer to NERC Reliability Guideline for integrating inverter-based resources into low short circuit strength systems[17].

[17] https://www.nerc.com/comm/PC_Reliability_Guidelines_DL/Item_4a._Integrating%20_Inverter-Based_Resources_into_Low_Short_Circuit_Strength_Systems_-_2017-11-08-FINAL.pdf

6.2 REGC_A Block Diagram and Model Parameters

Figure 20: REGC_A Block Diagram
[https://www.wecc.org/Reliability/WECC%20Wind%20Plant%20Dynamic%20Modeling%20Guidelines.pdf]

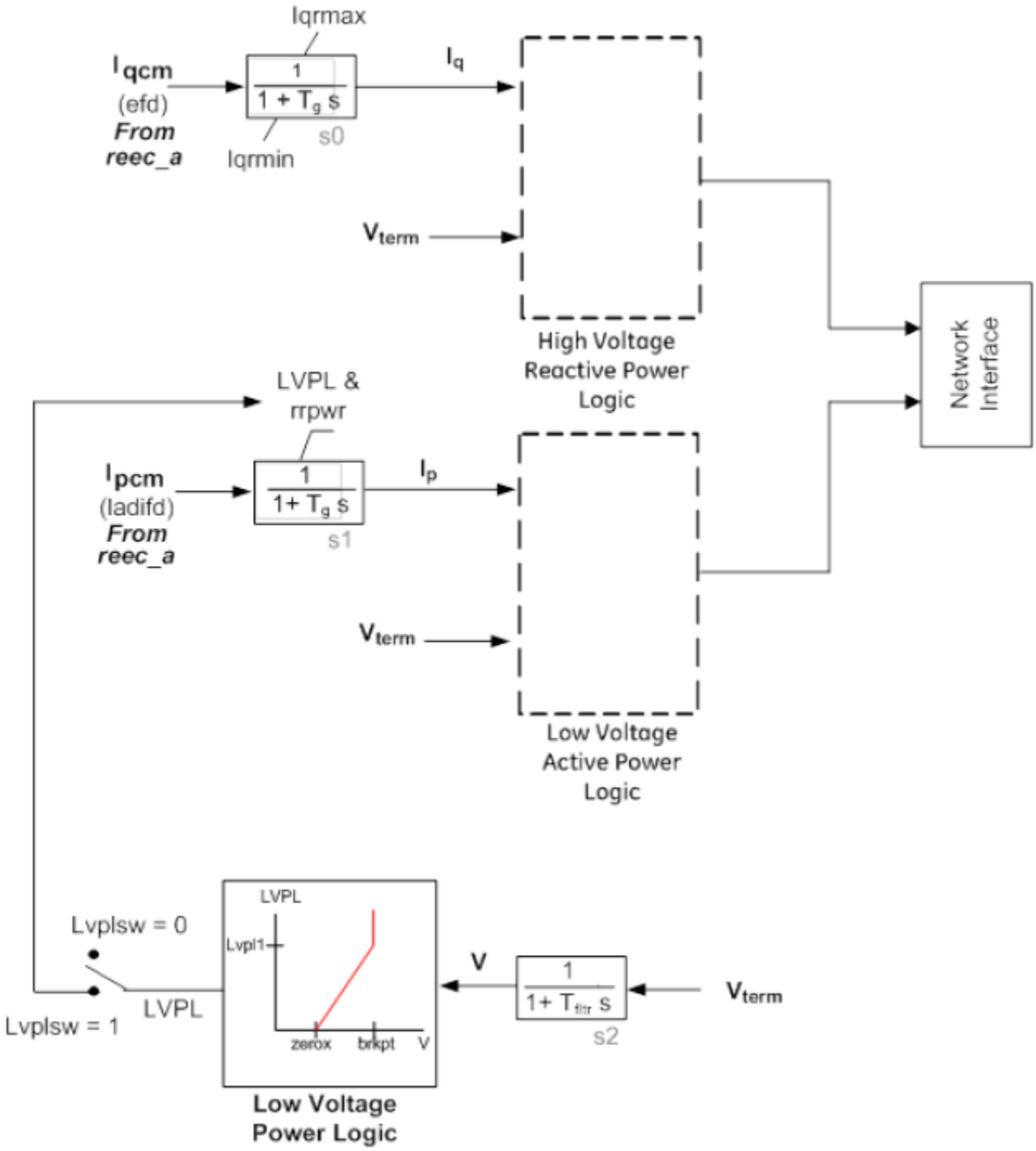

The high-voltage reactive power logic and low-voltage active power logic are explained below.

Figure 21: Instantaneous High Voltage Reactive Power Logic Flowchart

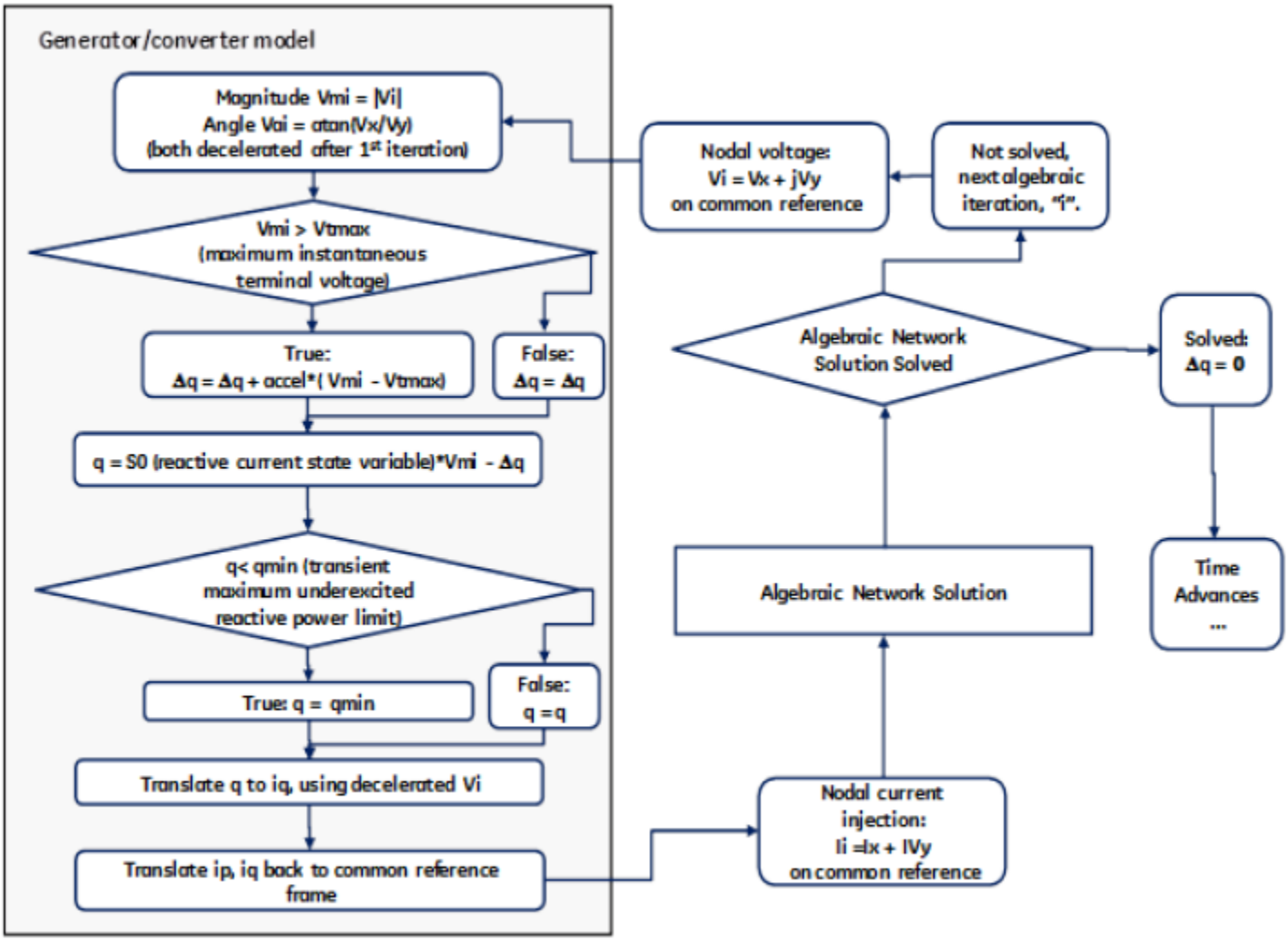

Figure 22: Instantaneous Low Voltage Active Power Logic Flowchart

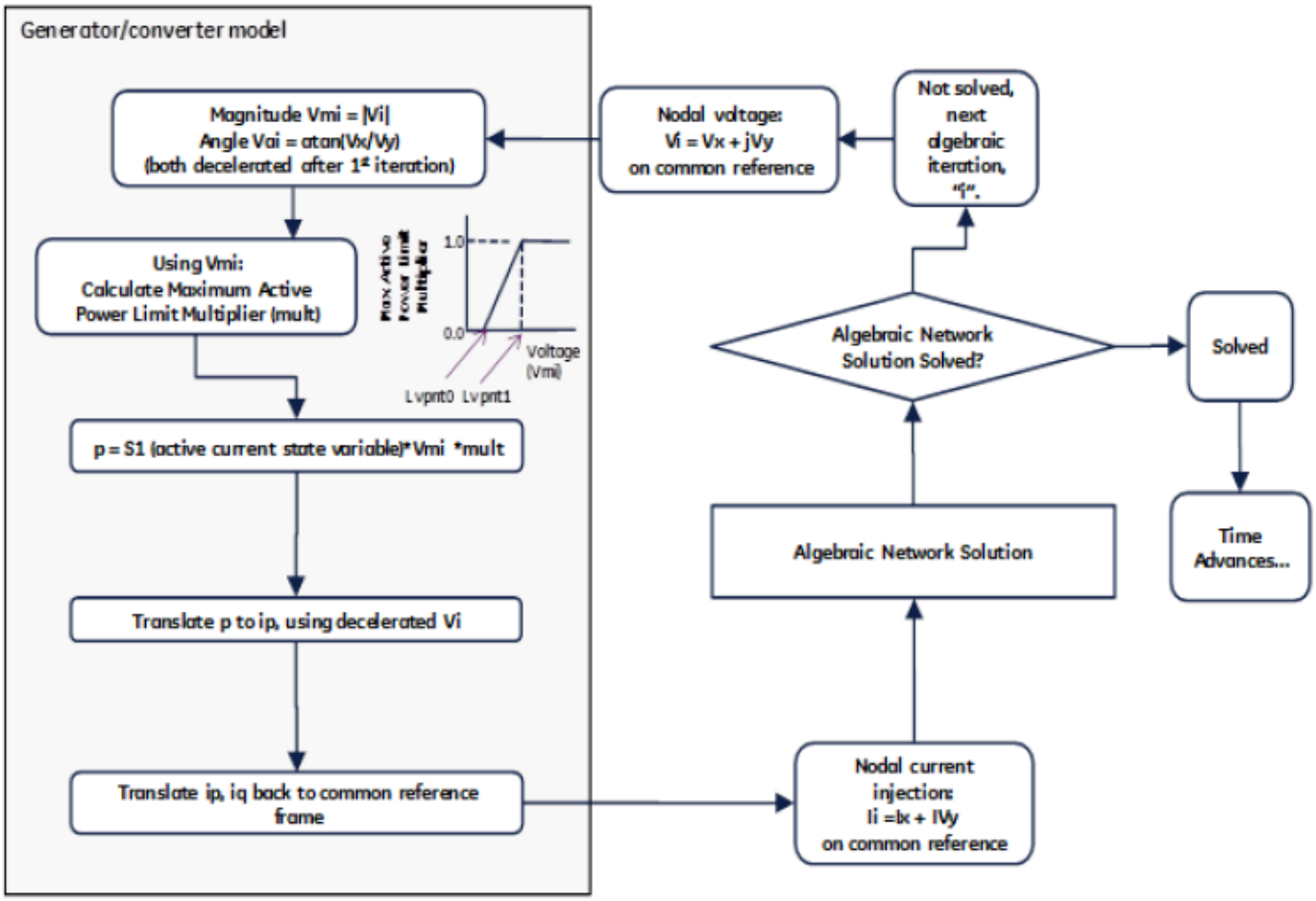

Table 9: REGC_A Input Parameters

REGC_A Input Parameters		
Name	**Description**	**Typical Values**
lvplsw	Enable (=1) or disable (=0) Low Voltage Power Logic, LVPL	-
rrpwr	Active current up-ramp rate limit on voltage recovery, p.u./sec.	10.00
brkpt	LVPL breakpoint, p.u.	0.90
zerox	LVPL zero crossing, p.u.	0.40
lvpl1	LVPL gain breakpoint, p.u.	1.22
vtmax	Voltage limit in the high voltage reactive current, p.u.	1.20
lvpnt1	High voltage point for low voltage active current management, p.u.	0.80
lvpnt0	Low voltage point for low voltage active current management, p.u.	0.40
qmin	Limit in the high voltage reactive current management, p.u.	-1.30
accel	High voltage reactive current management acceleration factor, p.u.	0.70
tg	Inverter current regulator lag time constant, sec.	0.02
tfltr	Terminal voltage filter (for LVPL) time constant, sec.	0.02
iqrmax	Maximum rate-of-change of reactive current, p.u./sec.	999.00
iqrmin	Minimum rate-of-change of reactive current, p.u./sec.	-999.00
xe	Generator effective reactance, p.u.	0.00

6.3 REEC_A Block Diagram and Model Parameters

Figure 23: REEC_A Block Diagram
[https://www.wecc.org/Reliability/WECC%20Wind%20Plant%20Dynamic%20Modeling%20Guidelines.pdf]

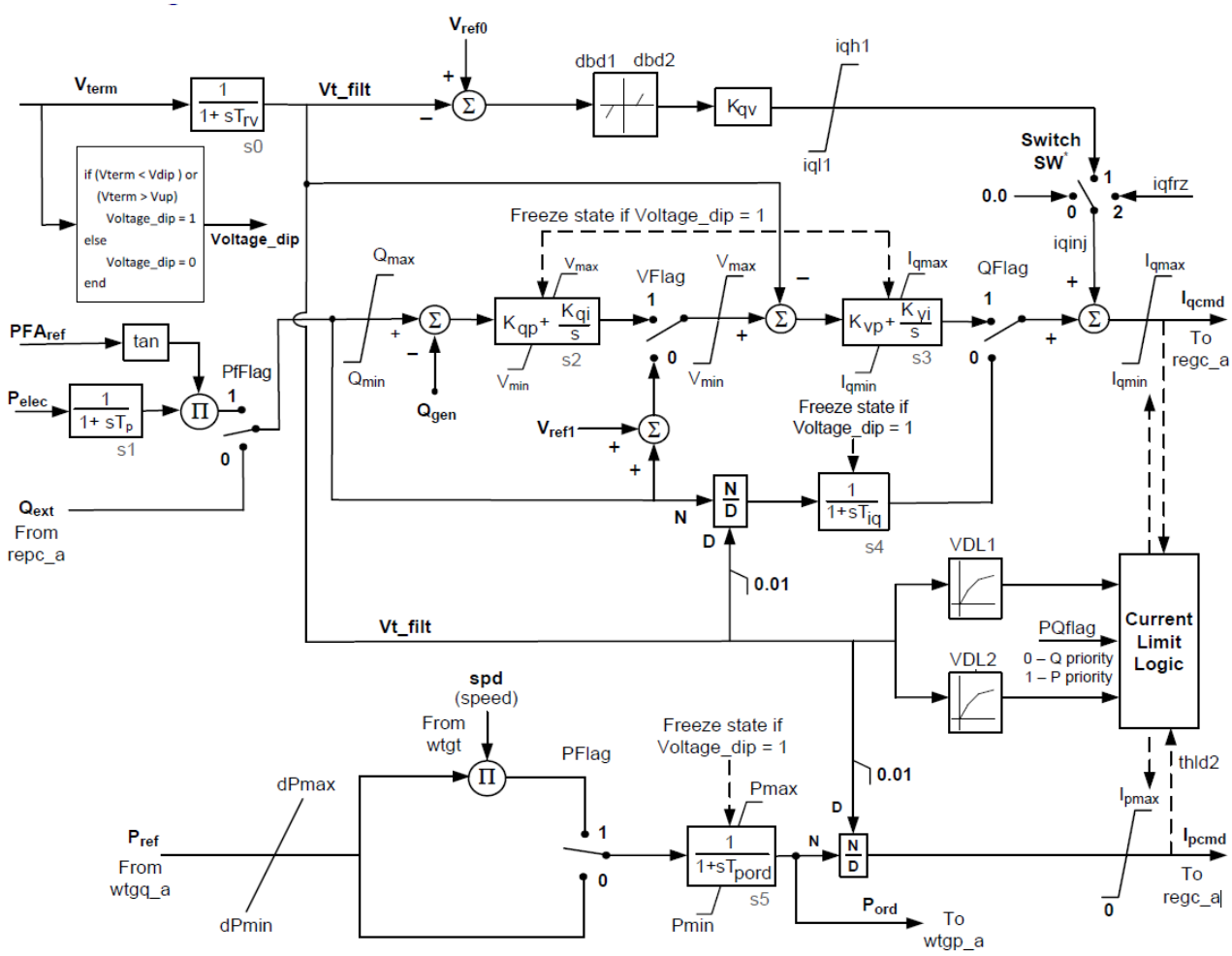

Table 10: REEC_A Input Parameters

REEC_A Input Parameters		
Name	**Description**	**Typical Values**
mvab	If mvab is less than or equal to zero, then the base used by regc_a is also used in reec_b	0.0
vdip	Low voltage condition trigger voltage, p.u.	[0.00, 0.90]
vup	High voltage condition trigger voltage, p.u.	[1.10, 1.30]
trv	Terminal bus voltage filter time constant, sec.	[0.02, 0.05]
dbd1	Overvoltage deadband for reactive current injection, p.u.	[-0.10, 0.00]
dbd2	Undervoltage deadband for reactive current injection, p.u.	[0.00, 0.10]
kqv	Reactive current injection gain, p.u.	2.0

iqh1	Maximum reactive current injection, p.u.	[0.00, 1.10]
iql1	Minimum reactive current injection, p.u.	[-1.10, 0.00]
vref0	Reference voltage for reactive current injection, p.u.	0.0
iqfrz	Value at which Iqinj is held for thld seconds following a voltage dip event	
thld	Time delay associated with iqinj when voltage_dip is reset from 1 to 0, sec.— If thld = 0, switch SW is reset to position 0. If thld > 0, switch SW is set to position 2 for thld seconds; then SW is reset to position 0. If thld < 0, switch SW is held at position 1 for thld seconds; then SW is reset to position 0.	0.0
thld2	Time of holding the active current command after voltage_dip returns to 0, sec.	0.0
tp	Active power filter time constant, sec.	[0.02, 0.05]
qmax	Maximum reactive power when vflag = 1, p.u.	[0.00, 0.43]
qmin	Minimum reactive power when vflag = 1, p.u.	[-0.43, 0.00]
vmax	Maximum voltage at inverter terminal bus, p.u.	[1.05, 1.15]
vmin	Minimum voltage at inverter terminal bus, p.u.	[0.85, 0.95]
kqp	Local Q regulator proportional gain, p.u.	-
kqi	Local Q regulator integral gain, p.u.	-
kvp	Local voltage regulator proportional gain, p.u.	-
kvi	Local voltage regulator integral gain, p.u.	-
verf1	Inner-loop voltage control reference, p.u.	0.0
tiq	Reactive current regulator lag time constant, sec.	[0.02, 0.05]
dpmax	Active power up-ramp limit, p.u./sec.	999.00
dpmin	Active power down-ramp limit, p.u./sec.	-999.00
pmax	Maximum active power, p.u.	1.00
pmin	Minimum active power, p.u.	0.00
imax	Maximum apparent current, p.u.	[1.00, 1.70]
tpord	Inverter power order lag time constant (s)	[0.02, 0.05]
pfflag	Constant Q (=0) or local power factor (=1) control	-
vflag	Local Q (=0) or voltage control (=1)	-
qflag	Bypass (=0) or engage (=1) inner voltage regulator loop	-
pflag	Power reference flag (always set to 0 for solar PV plant)	0
pqflag	Priority to reactive current (=0) or active current (=1)	-
vq1—vq4	Voltage breaking points for reactive current limit, p.u.	-
iq1—iq4	Voltage-dependent reactive current limit, p.u.	-
vp1—vp4	Voltage breaking points for active current limit, p.u.	-
iq1—iq4	Voltage-dependent active current limit, p.u.	-

Figure 24: Illustration of VDL1

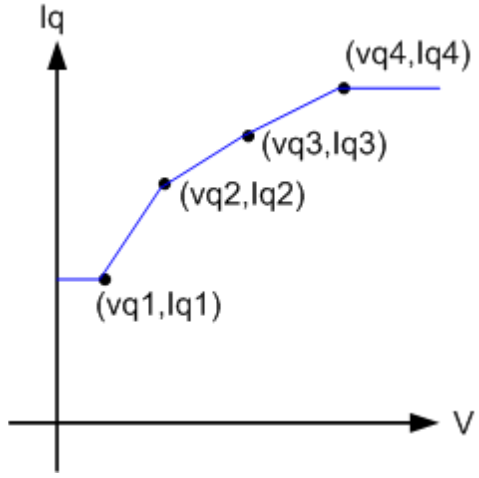

Figure 25: Illustration of VDL2

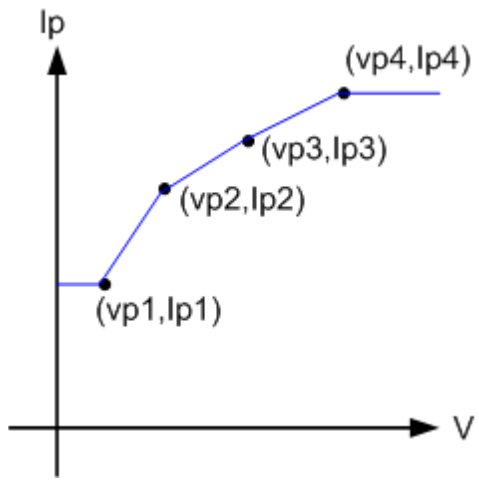

6.4 REPC_A Block Diagram and Model Parameters

Figure 26: REPC_A Block Diagram
[https://www.wecc.org/Reliability/WECC%20Wind%20Plant%20Dynamic%20Modeling%20Guidelines.pdf]

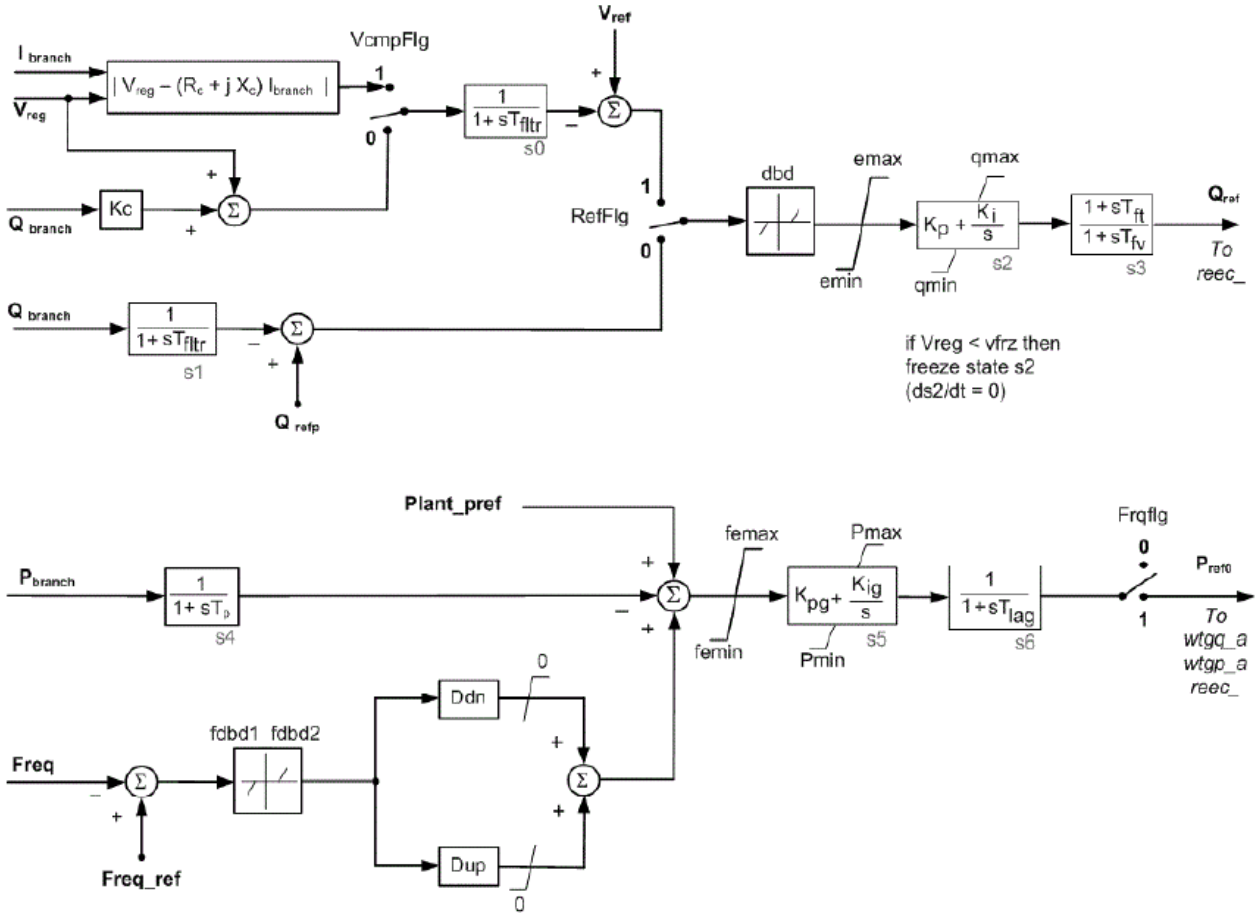

Table 11: REPC_A Input Parameters

REPC_A Input Parameters		
Name	**Description**	**Typical Values**
mvab	MVA base. If mvab is less than or equal to zero, then the base used by regc_a is also used in repc_a, MVA	0.0
tfltr	Voltage and reactive power filter time constant, sec.	[0.02, 0.05]
kp	Volt/VAr regulator proportional gain, p.u.	-
ki	Volt/VAr regulator integral gain, p.u.	-
tft	Plant controller Q output lead time constant, sec.	0.00
tfv	Plant controller Q output lag time constant, sec.	[0.02, 0.15]
refflag	Plant-level reactive power (=0) or voltage control (=1)	-
vfrz	Voltage for freezing Volt/VAr regulator integrator, p.u.	[0.00, 0.90]
rc	Line drop compensation resistance, p.u.	≥ 0.0
xc	Line drop compensation reactance, p.u.	≥ 0.0
kc	Reactive droop gain, p.u.	-
vcmpflag	Reactive droop (=0) or line drop compensation (=1)	-
emax	Maximum Volt/VAr error, p.u.	-999.00
emin	Minimum Volt/VAr error, p.u.	999.00
dbd	Reactive power deadband when refflag = 0, p.u. Voltage deadband when refflag = 1, p.u.	[0.00, 0.10]
qmax	Maximum plant reactive power command, p.u.	[0.00, 0.43]
qmin	Minimum plant reactive power command, p.u.	[-0.43, 0.00]
kpg	Real power control proportional gain, p.u.	-
kig	Real power control integral gain, p.u.	-
tp	Active power filter time constant, sec.	[0.02, 0.05]
fdbd1	Frequency deadband downside, p.u.	[-0.01, 0.00]
fdbd2	Frequency deadband upside, p.u.	[0.00, 0.01]
femax	Maximum power error in droop regulator, p.u.	-999.00
femin	Minimum power error in droop regulator, p.u.	999.00
pmax	Maximum plant active power command, p.u.	1.00
pmin	Minimum plant active power command, p.u.	0.00
tlag	Plant controller P output lag time constant, sec.	[0.02, 0.15]
ddn	Reciprocal of down regulation droop, p.u.	[0.00, 33.33]
dup	Reciprocal of up regulation droop, p.u.	0.00
frqflag	Governor response disable (=0) or enable (=1)	-

6.5 SAMPLE SOLAR PV POWER PLANT DATA REQUEST

This sample includes the basic modeling data request for solar PV plant. Each utility has its own data requirement, which might be more extensive.

1. **One-Line Diagram**—A sample is shown below:

Figure 27: Sample One-Line Diagram

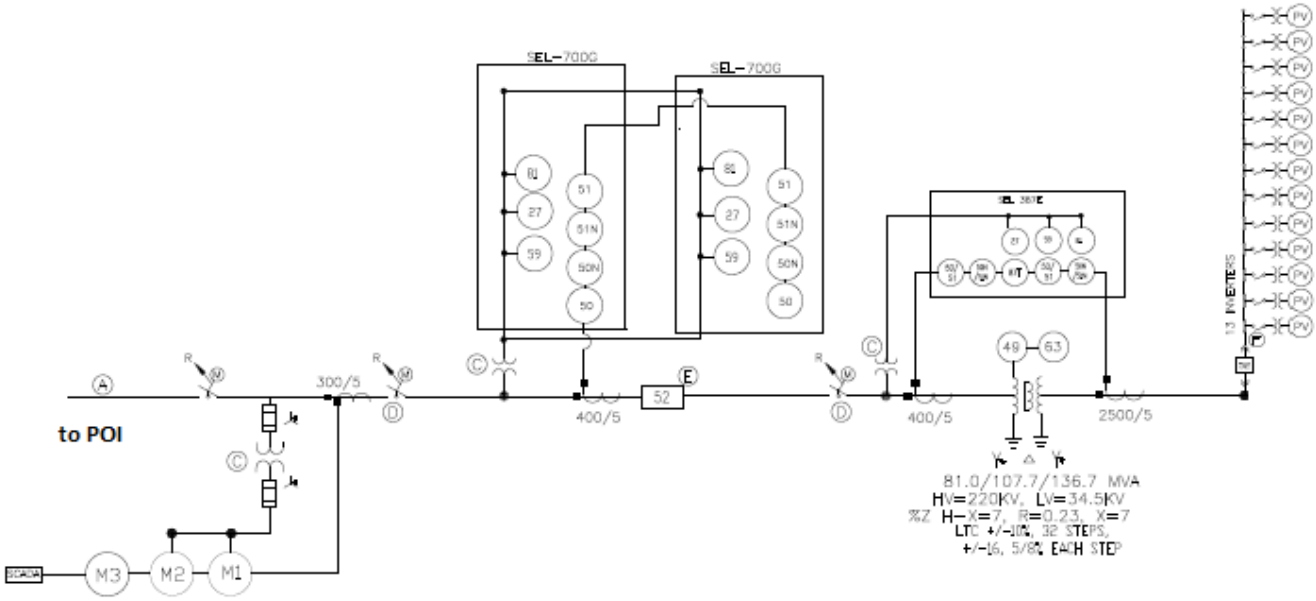

2. **Interconnection Transmission Line**
   - Point of Interconnection (substation or transmission line name): _____
   - Line voltage =_____kV
   - R =_____ohm or_____pu on 100 MVA and line kV base (positive sequence)
   - X =_____ohm or_____pu on 100 MVA and line kV base (positive sequence)
   - B =_____µF or_____pu on 100 MVA and line kV base (positive sequence)
   - R0 =_____ohm or_____pu on 100 MVA and line kV base (zero sequence)
   - X0 =_____ohm or_____pu on 100 MVA and line kV base (zero sequence)
   - Line normal rating = _____Amps or _____MVA
   - Line emergency rating = _____Amps or _____MVA

3. **Station Transformer**

   Note: If there are multiple transformers, data for each transformer should be provided.

   - Rating (ONAN/ONAF/ONAF):_____/_____/_____MVA
   - Nominal Voltage for each winding (Low /High /Tertiary):_____/_____/_____kV
   - Connection for each winding (Wye, Wye Grounded, Delta, Delta Buried):____/_____/_____
   - Available taps:_____(indicate fixed or with LTC), Operating Tap: _____

- Positive sequence Z_{HL}:_____%,_____X/R on _____MVA base

4. **Collector System Equivalent Model.**
   This can be found by applying the equivalencing method described in Section 1.1.5.

   - Collector system voltage =_____kV
   - R =_____ohm or_____pu on 100 MVA and collector kV base (positive sequence)
   - X =_____ohm or_____pu on 100 MVA and collector kV base (positive sequence)
   - B =_____μF or_____pu on 100 MVA and collector kV base (positive sequence)
   - R0 =_____ohm or_____pu on 100 MVA and collector kV base (zero sequence)
   - X0 =_____ohm or_____pu on 100 MVA and collector kV base (zero sequence)

5. **Inverter Step-Up Transformer.**
   Note: These are typically two-winding air-cooled transformers. If the proposed project has several types or sizes of step-up transformers, please give data for each type.

   - Rating:___MVA
   - Nominal voltage for each winding (Low /High):_____/_____kV
   - Available taps:_____(indicate fixed or with LTC), Operating Tap:_____
   - Positive sequence impedance (Z1)_____%,_____X/R on _____MVA base

6. **Inverter and Solar PV Module Data.**
   - Number of Inverters: ____
   - Nameplate Rating (each Inverter):_____/_____kW/kVA
   - Describe reactive capability as a function of voltage: _____
   - Inverter Manufacturer and Model #: _____
   - Solar PV Module Manufacturer and Model #: _____
   - [Note: This section would also request completed PSLF or PSS/E data sheets for the generic solar PV library model(s) once they are available.]

7. **Plant Reactive Power Compensation.**

Provide the following information for plant-level reactive compensation, if applicable:

- Individual shunt capacitor and size of each:_____X_____MVA
- Dynamic reactive control device, (SVC, STATCOM): _____
- Control range_____MVAr (lead and lag)
- Control mode (e.g., voltage, power factor, reactive power): _____
- Regulation point _____
- Describe the overall reactive power control strategy: _____

WECC receives data used in its analyses from a wide variety of sources. WECC strives to source its data from reliable entities and undertakes reasonable efforts to validate the accuracy of the data used. WECC believes the data contained herein and used in its analyses is accurate and reliable. However, WECC disclaims any and all representations, guarantees, warranties, and liability for the information contained herein and any use thereof. Persons who use and rely on the information contained herein do so at their own risk.

Version History

Modified Date	Modified By	Description