WECC Tutorial on Speed Governors

WECC Control Work Group

February 1998
WECC Name Revised June 2002

Principal Investigators: Hoa D. Vu & J. C. Agee

WECC Tutorial on Speed Governors

1.0 Introduction

Direct speed governing and the supplemental adjustment of speed governor setpoints are the methods used on present day power systems for matching generation to load, for the allocation of generation output among generation sources, and for the achievement of desired system frequency. This tutorial provides the reader with basic information on speed governors and their application for system control. All speed governors, whether mechanical-hydraulic, electro-hydraulic, or digital electro-hydraulic, have similar steady-state speed-output characteristics, so their application for system control (for slow changes) is the same.

2.0 General Governor Operation

Speed governors vary prime mover output(torque) automatically for changes in system speed (frequency). The speed sensing device is usually a flyball assembly for mechanical-hydraulic governors and a frequency transducer for electro-hydraulic governors. The output of the speed sensor passes through signal conditioning and amplification (provided by a combination of mechanical-hydraulic elements, electronic circuits, and/or software) and operates a control mechanism to adjust the prime mover output (torque) until the system frequency change is arrested. The governor action arrests the drop in frequency, but does not return the frequency to the pre-upset value (approximately 60 Hz) on large interconnected systems. Returning the frequency to 60 Hz is the job of the AGC (Automatic Generation Control) system. The rate and magnitude of the governor response to a speed change can be tuned for the characteristics of the generator that the governor controls and the power system to which it is connected.

2.1 Governor Operation Example

Simplified schematics of mechanical and electronic speed governing systems are shown in Figure 1. If a decrease in system frequency occurs, due to a loss of generation or an increase in load, the shaft speed of each connected synchronous generator will also decrease. This speed decrease is transmitted to a mechanical governor flyball assembly by means of a shaft-mounted PMG (permanent magnet generator) and a ballhead motor, and to an electro-hydraulic governor frequency transducer by a toothed wheel or the generator potential transformers. As the flyballs spin more slowly, they move in causing the valve in Figure 1(a) to move up and allow more flow (fuel, steam, water, etc.) to the prime mover. In the same manner, the frequency decrease sensed by a frequency transducer will be amplified

and used to open the valve in Figure 1(b). Thus, the output power (torque) of the controlled prime mover will increase and help arrest the frequency drop.

2.2 Deadband

There are two types of deadband in speed governing systems: inherent and intentional. Test results from many different types of governors including mechanical-flyball, analog electronic, and digital electronic indicate that inherent deadband is very small (less than .005 Hz) on most governors connected to the power system and can be neglected. Intentional deadband, conversely, may be used by some manufacturers and generation operators to reduce activity of controllers for normal power system frequency variations and may be large enough (about .05 Hz) to affect overall power system frequency control performance. NERC Policy 1C, Guide 3 suggests "Governors should, as a minimum, be fully responsive to frequency deviations exceeding ±0.036 Hz (± 36 mHz)."

2.3 Speed Droop

The definition of droop is the amount of speed (or frequency) change that is necessary to cause the main prime mover control mechanism to move from fully closed to fully open. In general, the percent movement of the main prime mover control mechanism can be calculated as the speed change (in percent) divided by the per unit droop.

A governor tuned with speed droop will open the control valve a specified amount for a given disturbance. This is accomplished by using feedback from the main prime mover control mechanism (valve, gate, servomotor, etc.). A simplified block diagram of a droop governor is shown in Figure 2. If a 1% change in speed occurs, the main control mechanism must move enough to cause the feedback through the droop element to cancel this speed change. Thus, for a 1% speed change, the percent movement of the main control mechanism will be the reciprocal of the droop (i.e. if the droop is 5% the movement will be 1/.05 = 20).

If the governor is tuned to be "isochronous" (i.e. zero droop), it will keep opening the valve until the frequency is restored to the original value. This type of tuning is used on small, isolated power systems, but would result in excess governor movement on large, interconnected systems. Therefore, speed droop is used to control the magnitude of governor response for a given frequency change so all generators will share response after a disturbance.

2.4 Speed Regulation

The term speed regulation refers to the amount of speed or frequency change

that is necessary to cause the output of the synchronous generator to change from zero output to full output. In contrast with droop, this term focuses on the output of the generator, rather than the position of its valves. In some cases, especially in hydro, the droop setting will be significantly different from the resulting speed regulation. This is due to the nonlinear relationship between valve position and water, gas or steam flow through the turbine. Governors using droop feed back should be adjusted so that the speed regulation meets the power system requirements. Speed regulation can be implemented directly in electrohydraulic and digital electrohydraulic governors by using a watt transducer to provide feedback from the generator output to replace the feedback from the prime mover control mechanism as shown in Figure 3.

If a 1% change in speed occurs, the generator output must move enough to cause the feedback through the speed regulation element to cancel this speed change. Thus, for a 1% speed change, the percent change in generator output will be the reciprocal of the speed regulation (i.e. if the speed regulation is 5% the movement will be 1/.05 = 20). In general, the percent change in generator output for a system frequency disturbance can be calculated as the speed change (in percent) divided by the per unit speed regulation.

3.0 Impact of Droop and Regulation on Power System Performance

Governors using speed droop or speed regulation require a sustained change in system frequency to produce a sustained change in prime mover control mechanism or generator power output. Therefore, governors alone cannot restore the power system frequency to the pre-disturbance level. This fact can be illustrated by considering the two unit system shown in Figure 4. Both units are rated at 100 MW and are initially loaded at 50 MW. Both units have governors with speed regulation; however, Unit 1 is set for 5% speed regulation and Unit 2 is adjusted for 2% speed regulation.

To examine system response, a 35 MW increase in electrical load is applied to the system. The system frequency will decline until generation and load are matched. The steady-state frequency that the system will attain can be determined by considering the speed-load characteristic curves for the two units as shown in Figure 5. To balance generation and load, 35 MW of additional power must be produced by the two units. As frequency declines, each unit governor will increase the output of its associated generator until the speed regulation feedback signal cancels the speed change as explained in 2.3.

The initial equilibrium operating point is denoted on Figure 5 as I_0. As the frequency drops, Unit 1 will produce an additional 10% (or 10 MW) of generation for every 0.5% drop in frequency, while Unit 2 will produce 25% (25 MW), due to their differing speed regulation adjustments. Thus, the final speed of the system will be

99.5%, with Unit 1 producing 60 MW (at Point I_1) and Unit 2 producing 75 MW (at Point I_2). Note that a unit with a lower speed regulation setting is more responsive to a change in system frequency. Additionally, the system percent speed regulation can be calculated as the percent steady-state frequency change divided by the per unit steady-state power change. For this example system the overall speed regulation is 0.5%/(35/200) = 2.86%.

An example of the response of a large hydroelectric generating unit to a system frequency disturbance is shown in Figure 6. Initially, the frequency declines below the steady-state point due to the slow nature of most prime mover controls. This unit can be seen to contribute 10 MW for a steady-state frequency decline of about 0.04 Hz (.067%). The unit rating is 690 MW so the speed regulation of this unit is 4.6%. During the disturbance, the gate position increased by about 1%, so the speed droop would be 6.67%.

4.0 Supplementary Regulation

An important feature of a governor system is the device by which the main prime mover control mechanism, and hence the generator power output, can be changed without requiring a change in system speed. This is accomplished by the speed reference (or speed adjustment) input shown in both Figures 2 and 3. This adjustment can be made by local action of plant control operator, or remotely from the dispatch center automatic generation control system. In mechanical governors, a "speeder motor" drives a linkage that is added to the output of the ballhead linkage and the droop feedback linkage by a system of floating levers. In analog or digital electrohydraulic governors, a motor-operated potentiometer or digital reference setter provides the reference signal to the electronic circuits.

The effect of the speed reference input is to produce a family of parallel speed-load characteristic curves as shown in Figure 7. Increasing the speed reference of a generator that is connected to a large power system will result in more power being produced by the unit. Therefore, the power output of particular generators can be adjusted at will to allow for economic dispatch of generation sources. In addition, supplementary regulation of several generator speed reference inputs after a disturbance permits the restoration of system frequency. Increasing the speed reference of a generator connected to a small or isolated power system will increase the speed of the system, but not necessarily increase the power produced by the unit.

4.1 Impact of Supplemental Regulation on Power System Performance

Consider again the two-unit system shown in Figure 4. Assume that the initial operating conditions of one of the units are defined by point I_0 on Figure 7, where the initial frequency is 60 Hz and the unit generation is G_0. The other unit is

suddenly disconnected from the system and the resulting steady-state conditions for the remaining generator are represented by point I_1 after direct governing action as discussed in 3.0. System frequency has dropped to F_1 and the generator output has increased to G_1 to match the generation and load.

Supplemental regulation can now be applied to restore the system frequency to 60 Hz. Increasing the speed reference input of the governor will initially increase the power output of the generator and generation will exceed the load. Therefore, system frequency will begin to increase. As system frequency increases, the governor will act to decrease the power output of the generator according to the new speed-load characteristic curve defined by the speed reference level (line bb). Eventually, the generation and load will match at the intersection of line bb with the G_1 coordinate and the new equilibrium speed can be evaluated. As a result of this change in speed reference the kinetic (spinning) energy of the system has increased although the initial and final generation and load levels are the same (of course assuming no frequency dependent load). Additional steps of supplementary regulation followed by direct governing action result in the final steady-state condition (point I_2) being reached. The governing speed-load characteristic has now been shifted to line dd, generation output remains as G_1, and system frequency has been restored to 60 Hz.

Although the above example is very simplistic, in that the governing action of only one generator was described, it provides a basic illustration of how supplementary regulation is applied to governors, in general, to bring the system frequency back to normal following the loss of generation. In reality, supplementary regulation is applied through AGC (Automatic Generation Control) to many generators within the control area where generation was lost in an effort to restore frequency to 60 Hz, return tie line schedules to normal, and economically dispatch the remaining units.

5.0 Blocked Governors

Blocking the governor of a generator essentially bypasses the governing feedback mechanisms and maintains the generator at a fixed output level. Although this action may facilitate generator control for plant personnel, serious system problems may arise if too many generators are operating with blocked governors. These problems include:

a) system instability can occur since fewer units will be capable of reacting for system frequency deviations

b) restoration of system frequency to normal following a disturbance may take longer

c) loading on interties can be further aggravated during system disturbances

6.0 Bibliography

1. Cohn, N., *Control of Generation and Power Flow on Interconnected Systems*, Wiley, New York, 1961.

2. Miller, R., *Power System Operation*, McGraw-Hill, New York, 1970.

3. Weedy, B., *Electric Power Systems*, Wiley, New York, 1967.

4. Woodward Governor Co., "Role of Governors in System Operated Unified Control of Hydro Units, Prime Mover Control Conference, PMCC-3.

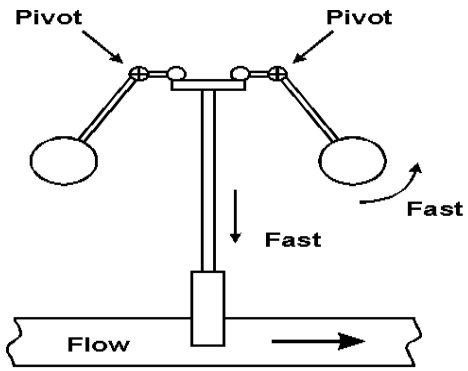

(a)
Simplified Mechanical Governor

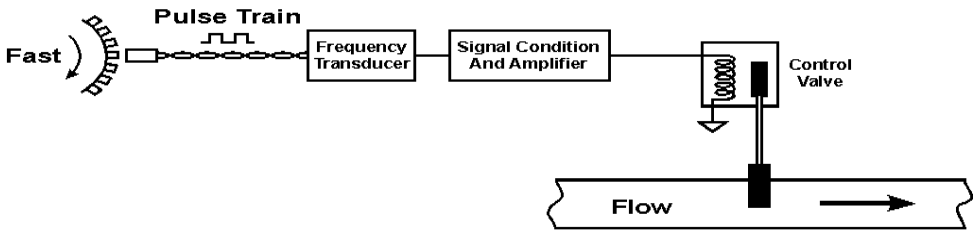

(b)
Simplified Electro Hydraulic Governor

Figure 1 - Simplified Governor Schematics

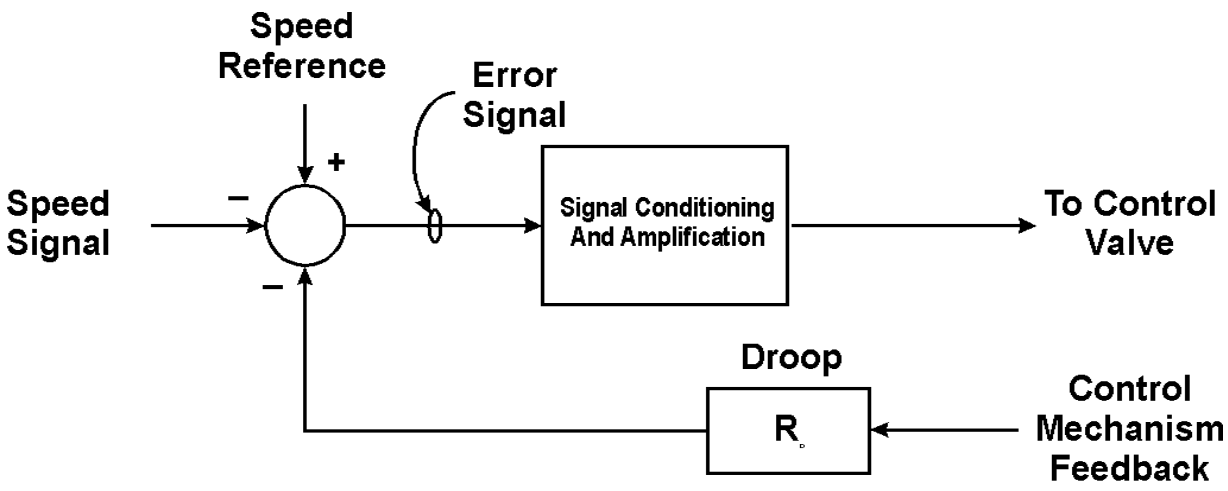

Figure 2 - Droop Governor Block Diagram

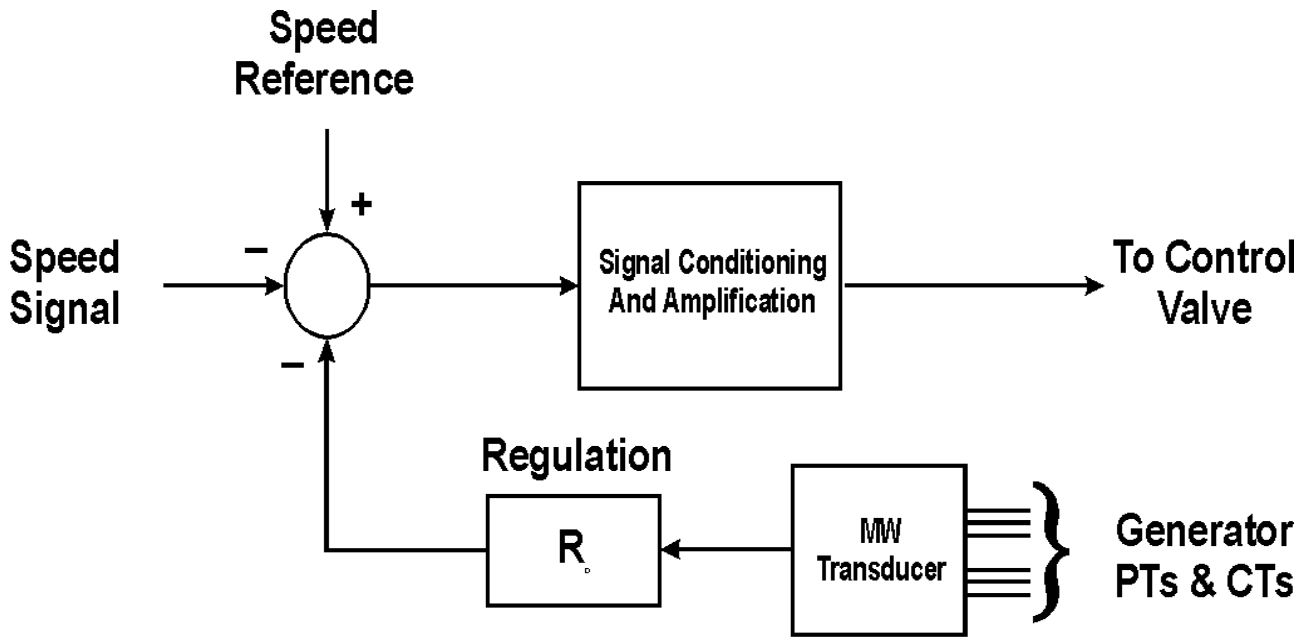

Figure 3 - Speed Regulation Governor

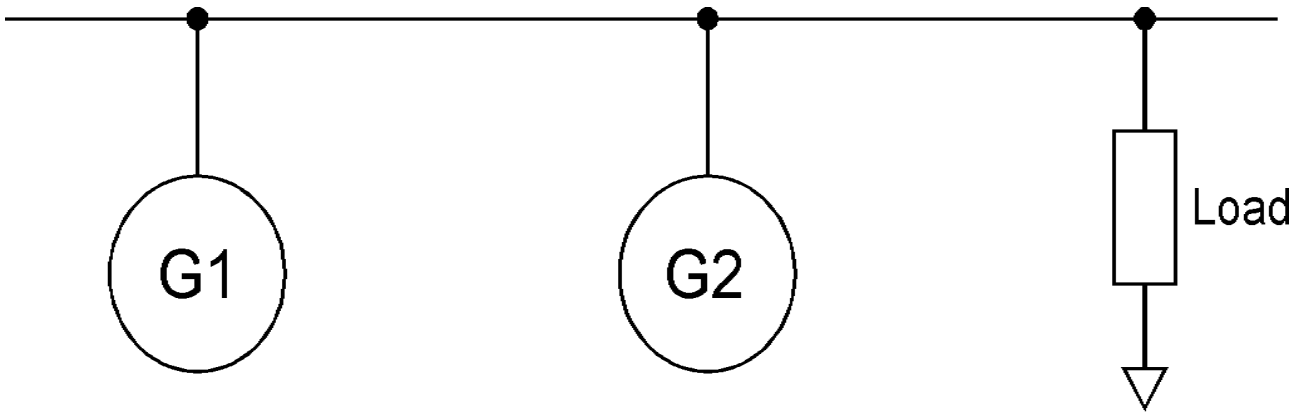

Figure 4 - Two-unit Power System

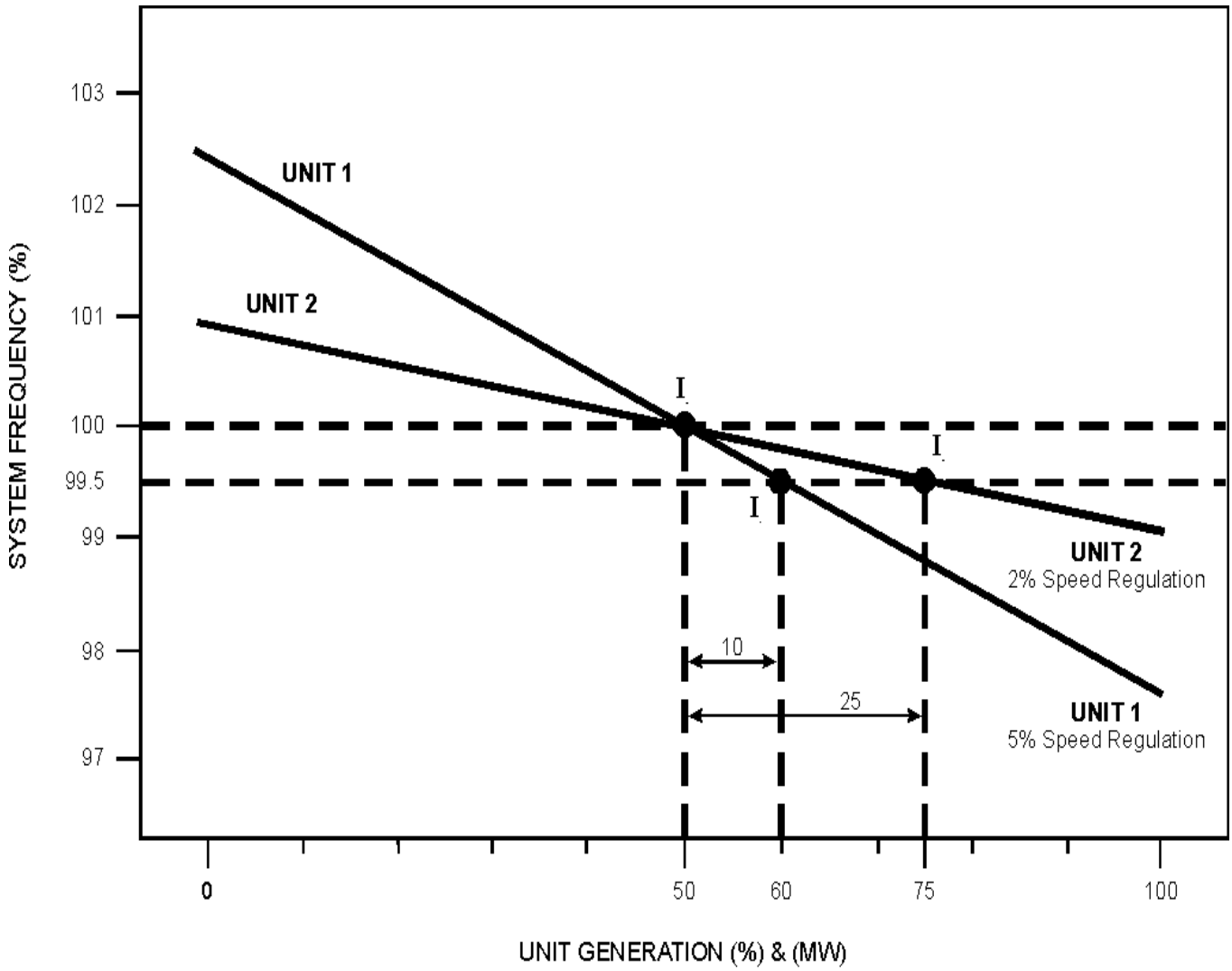

Figure 5

Governor speed-load characteristics for two generation units, one with 5% speed regulation and the other with 2% speed regulation. Initial system load as 100 MW. An additional load of 35 MW results in a drop in system frequency of ½ percent from normal.

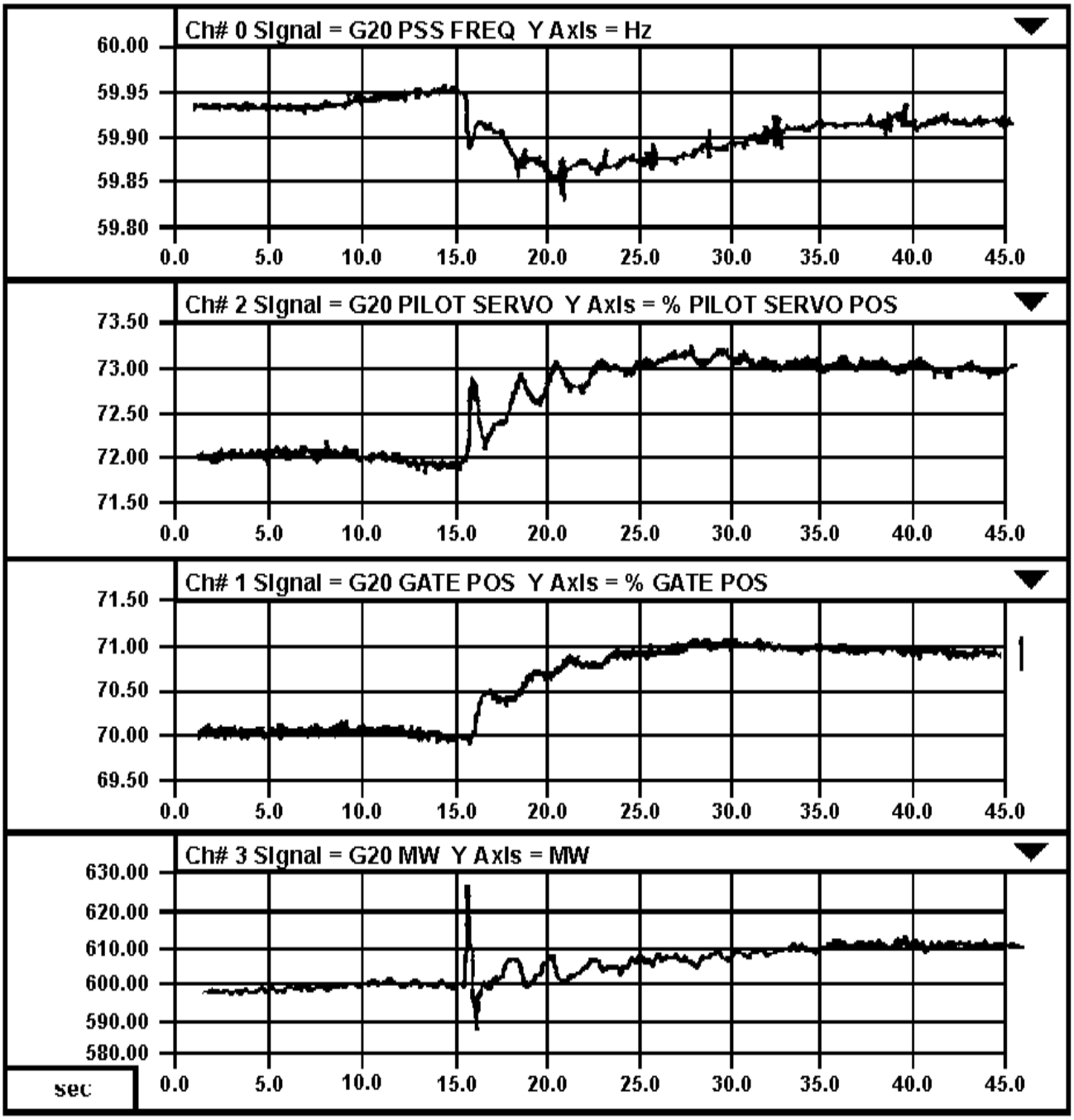

Figure 6 - Governor Response to a System Transient

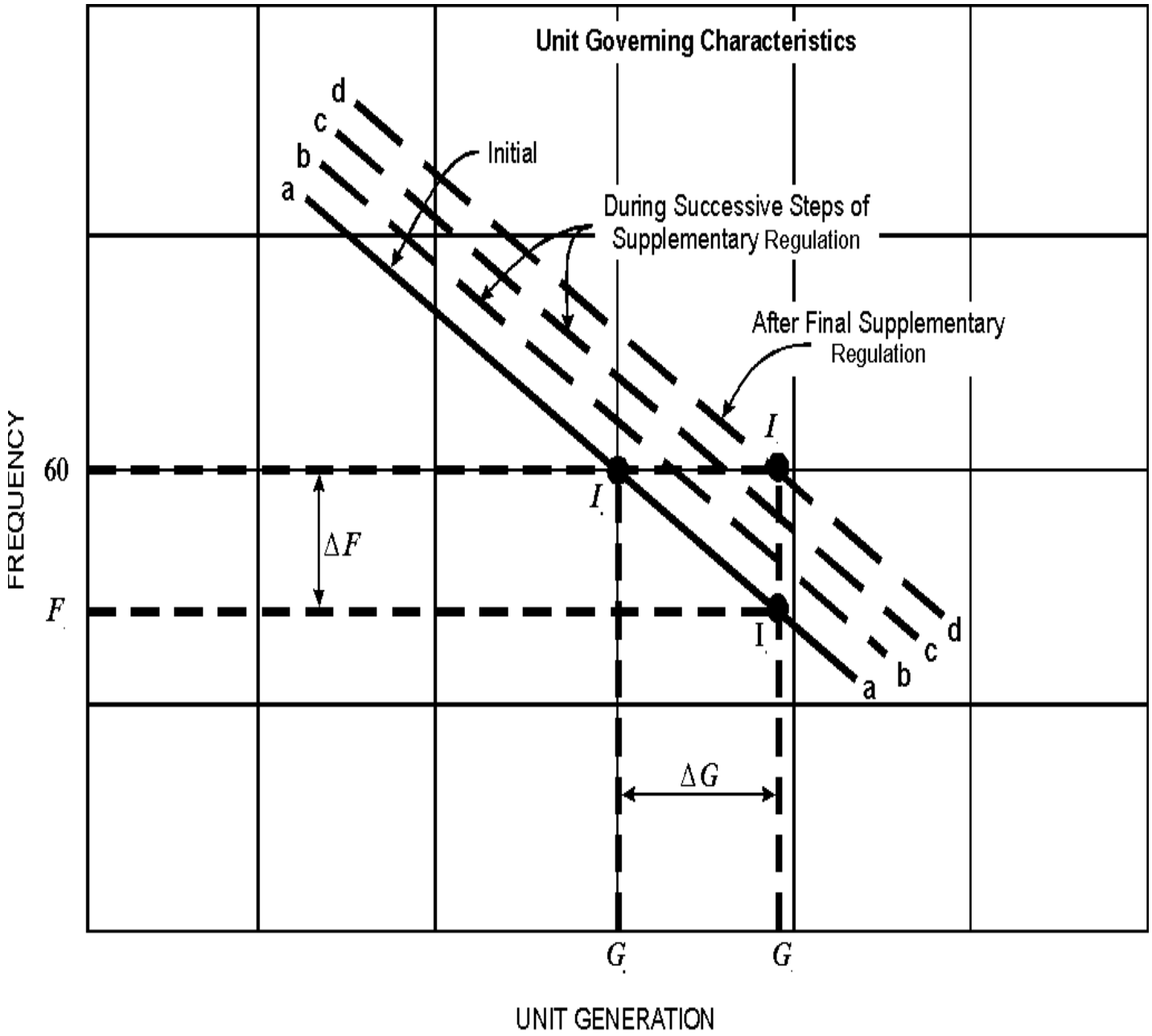

Figure 7

Generator Governing characteristics, before, during, and after supplementary regulation.